UAB „Conceptus group“
Giedraičių g. 39, R53, LT-09302 Vilnius, Lietuva
El. paštas: info@conceptus.lt

Projektavimo etapas	TECHNINIS DARBO PROJEKTAS	
Statytojas (Užsakovas)	KAUNO MIESTO SAVIVALDYBĖ	
Statybos rūšis	NAUJA STATYBA	
Kategorija	NEYPATINGASIS STATINYS	
Projekto numeris	24.289-TDP-SK.IS	
Projekto pavadinimas	KITŲ INŽINERINIŲ STATINIŲ GRUPĖS, UNIVERSALAUS SPORTO KOMPLEKSO (KITŲ TRANSPORTO STATINIŲ, SPORTO IR KITOS PASKIRTIES STATINIŲ) IR INŽINERINIŲ TINKLŲ GRUPĖS (VANDENTIEKIO TINKLŲ, NUOTEKŲ ŠALINIMO TINKLŲ, ELEKTROS TINKLŲ IR RYŠIŲ (TELEKOMUNIKACIJŲ) TINKLŲ PASKIRTIES) VEIVERIŲ G. 132, KAUNO M., STATYBOS PROJEKTAS	
Statinys	INŽINERINIAI TINKLAI SPORTO PASKIRTIES INŽINERINIAI STATINIAI KITOS PASKIRTIES INŽINERINIAI STATINIAI	
Projekto dalis	STATINIO KONSTRUKCIJŲ (INŽINERINIAI SKAIČIAVIMAI)	Tomas **IV** Laida **0**

Pareigos	Vardas, pavardė Kvalifikacijos atestato Nr	Data	Parašas
DIREKTORIUS	ROBERTAS VARASIMAVIČIUS	2026-02	
PROJEKTO VADOVAS	VIKTORAS VALAITIS Atest. Nr. 40836	2026-02	
PROJEKTO DALIES VADOVAS	VIKTORAS VALAITIS Atest. Nr. 22706	2026-02	
KONSTRUKTORIUS	ARVYDAS KUBLICKAS Atest. Nr. 27405	2026-02	

General view of the calculation scheme “Dviračių saugykla”

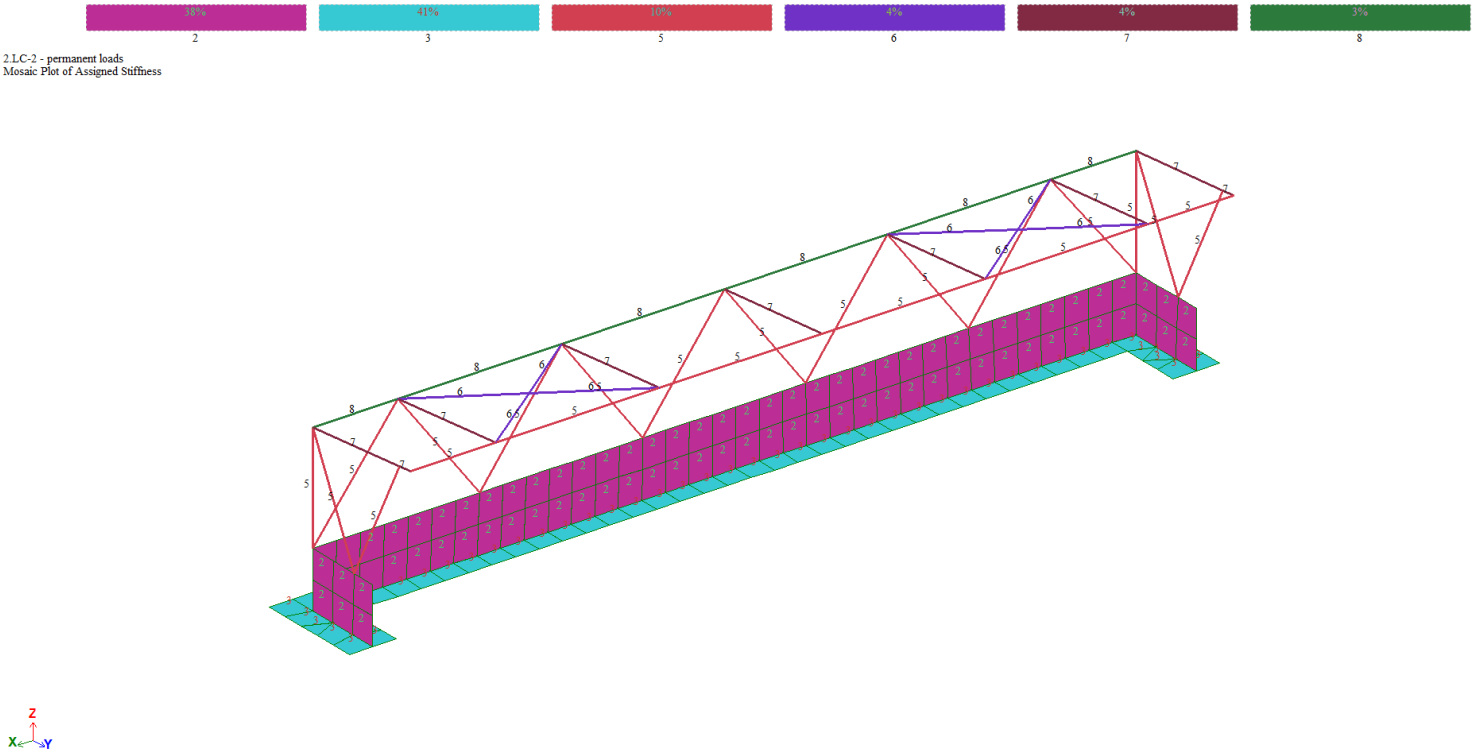

Apkrovos ir poveikiai

Statinio atsakingumo klasės koeficientas γn=1,0.
Skaičiavimuose priimtos apkrovos bei jų poveikiai:
LC-1 - self-weight;
LC-2 - permanent loads (From the roof structure)
LC-5 - snow;
LC-6- wind loads +X;
LC-7- wind loads -X;
LC-8- wind loads +Y;
LC-9- wind loads -Y;

LC-2

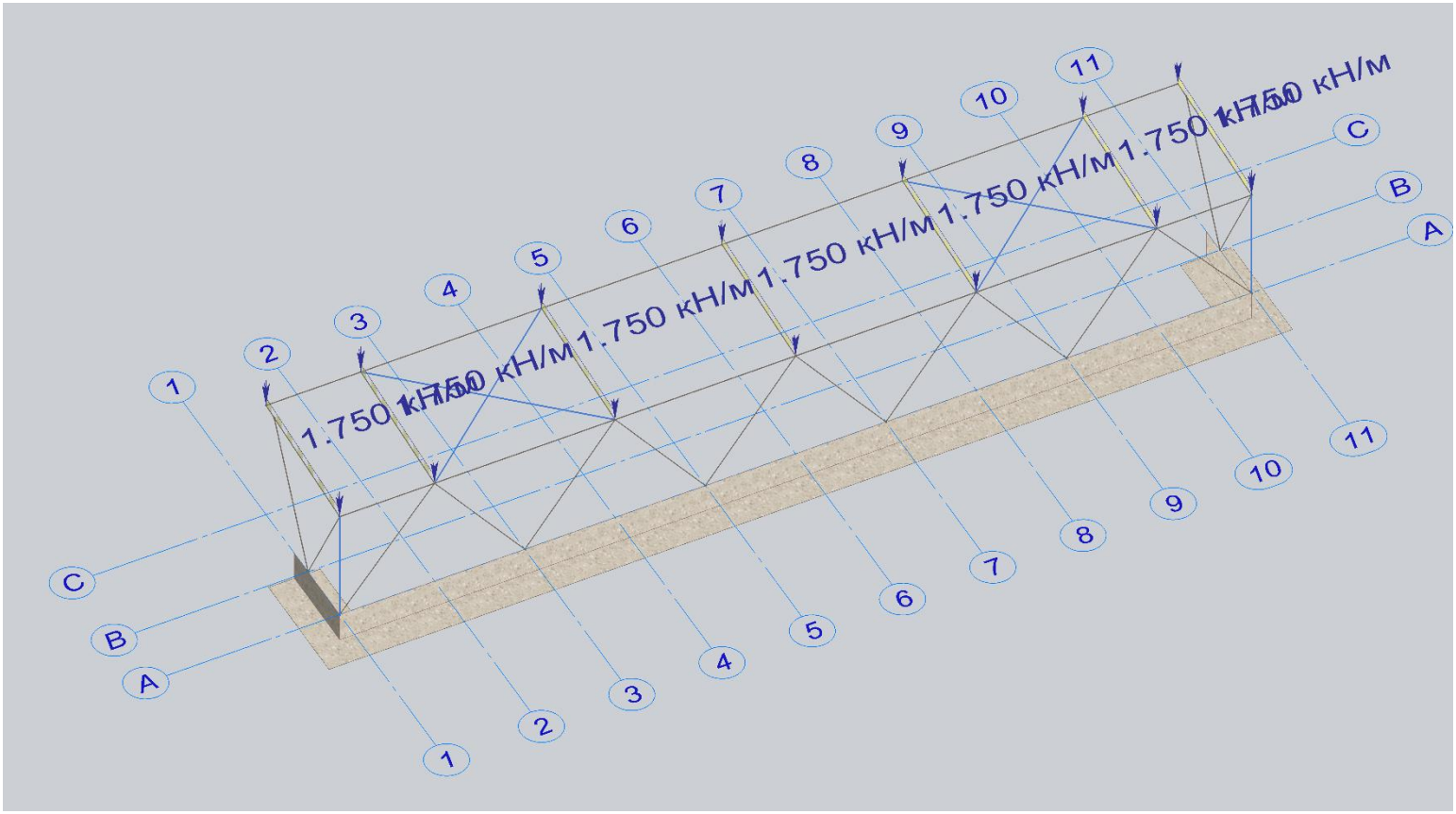
1.750 кН/м
1.750 кН/м
1.750 кН/м
1.750 кН/м
1.750 кН/м
1.750 кН/м
1
2
3
4
5
6
7
8
9
10
11
A
B
C

LC-5

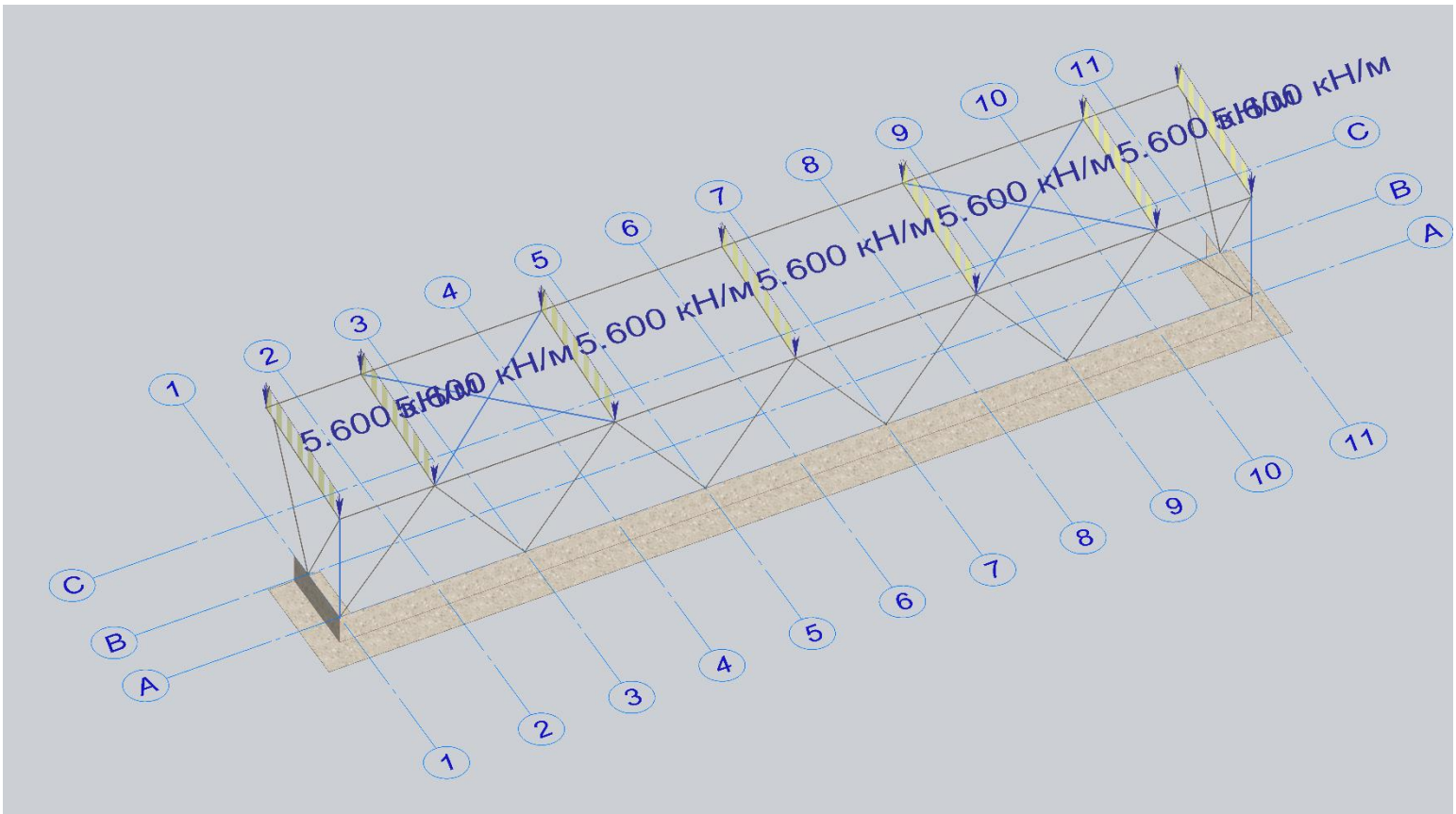
5.600 кН/м
5.600 кН/м
5.600 кН/м
5.600 кН/м
5.600 кН/м
5.600 кН/м
1
2
3
4
5
6
7
8
9
10
11
A
B
C

LC-6

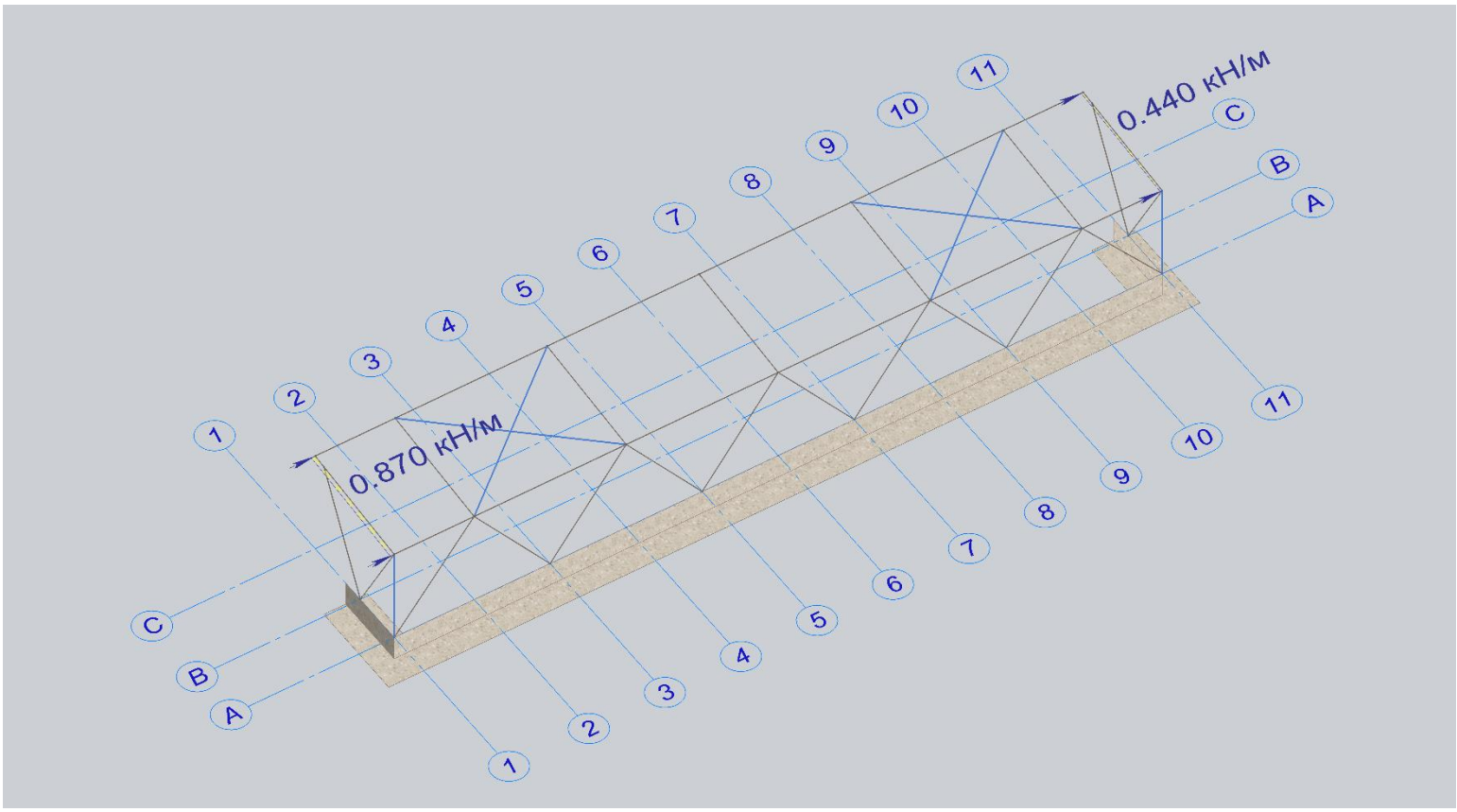
0.870 кН/м
0.440 кН/м
1
2
3
4
5
6
7
8
9
10
11
A
B
C

LC-7

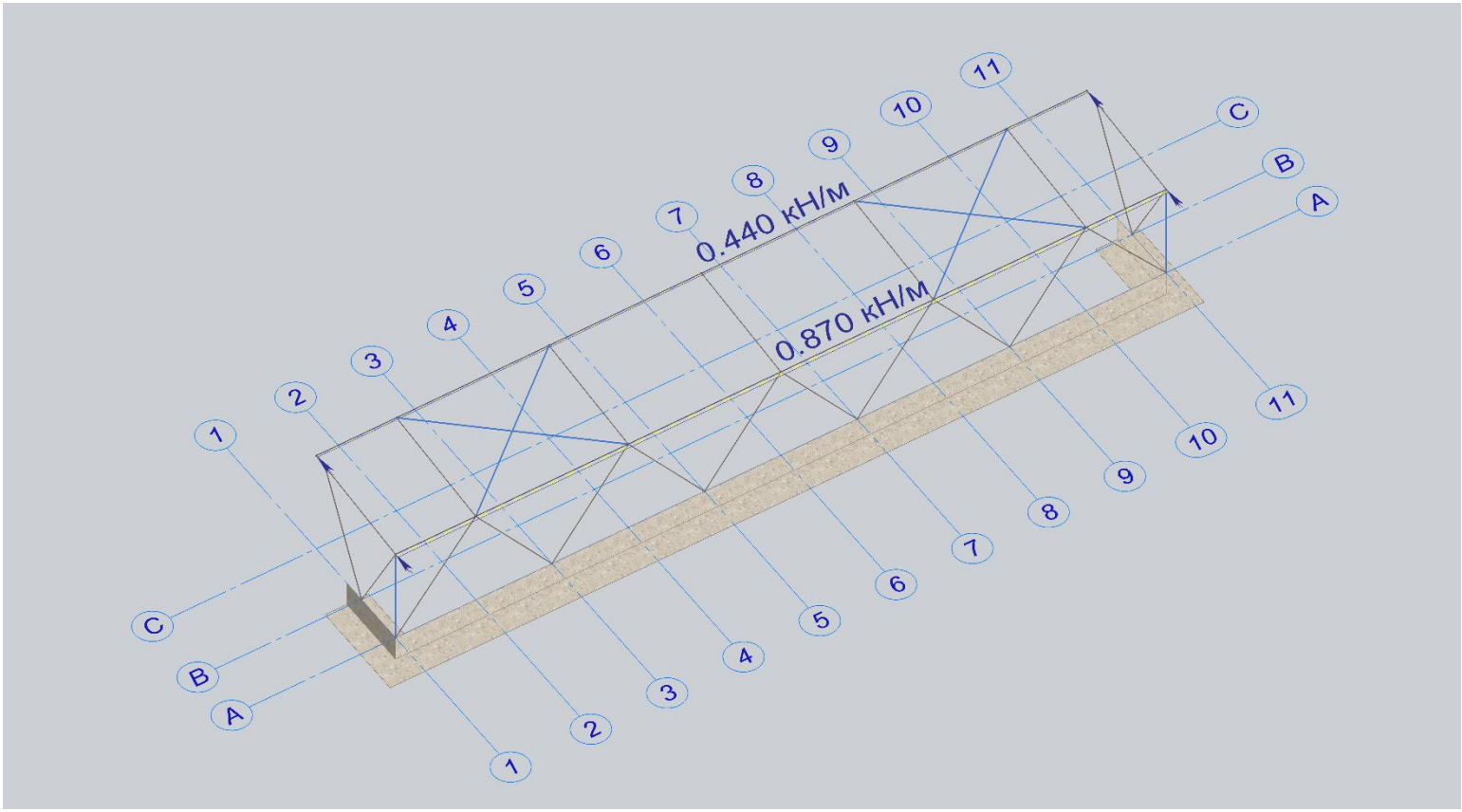
0.440 кН/м
0.870 кН/м
1
2
3
4
5
6
7
8
9
10
11
A
B
C

LC-8

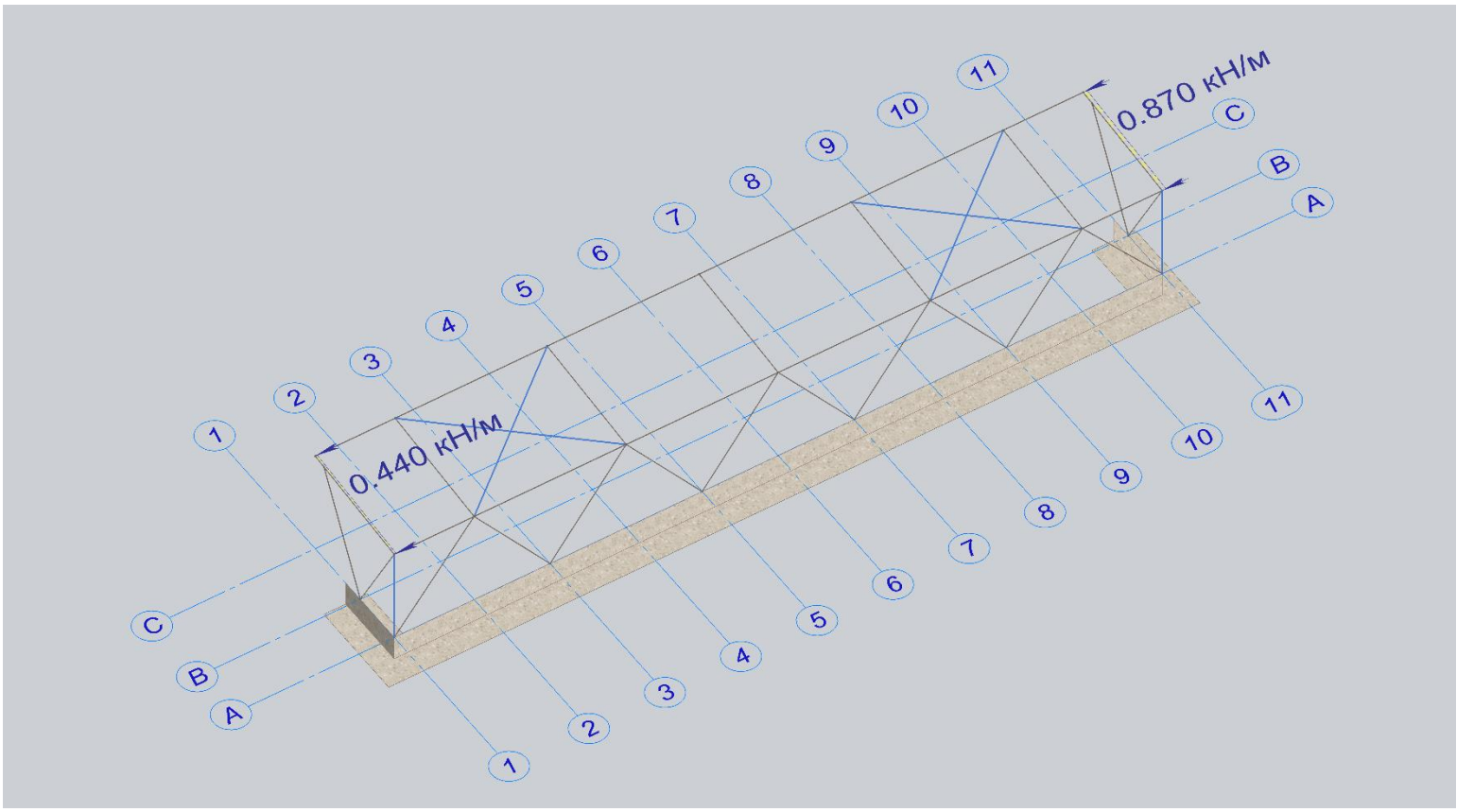
0.870 кН/м
0.440 кН/м
1
2
3
4
5
6
7
8
9
10
11
A
B
C

LC-9

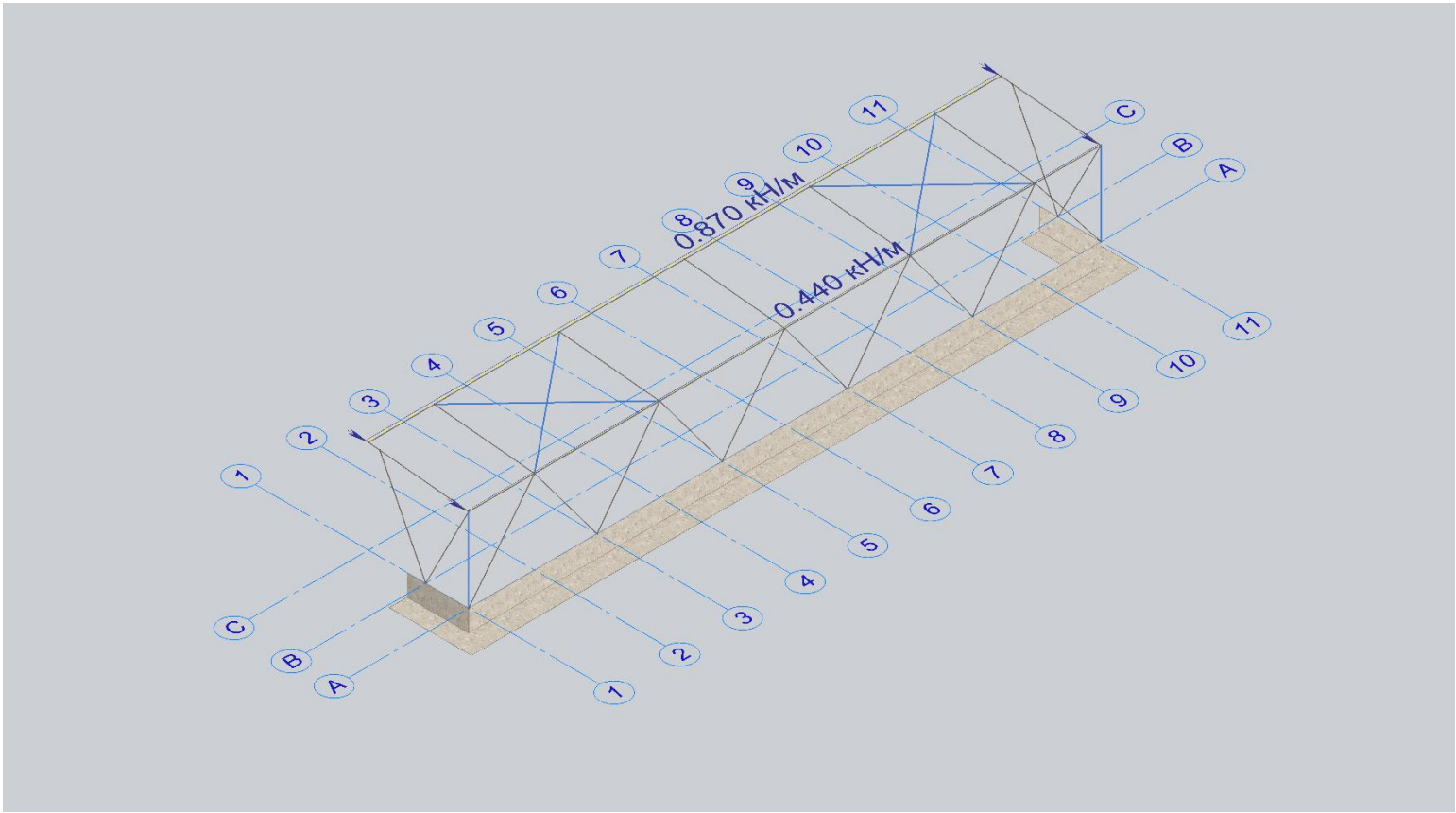
0.870 кН/м
0.440 кН/м
1
2
3
4
5
6
7
8
9
10
11
A
B
C

Wind action

The wind action is evaluated in accordance with the European standard EN 1-1-4. The wind action is represented by a simplified set of forces whose effects is equivalent to the extreme effects of the turbulent wind.

Project data

Terrain category: Terrain category III

Basic wind velocity: 24 m/s

Mean wind

The mean wind velocity $v_m(z)$ at a height z above the terrain depends on the terrain roughness and orography and on the basic wind velocity according to the following expression:

$$v_m(z) = c_r(z) \cdot c_o(z) \cdot v_b$$

where:

$c_r(z)$ is the roughness factor that depends on the terrain category and on the height z above the terrain of the relevant point;

$c_o(z)$ is the orography factor taken as 1;

v_b is the basic wind velocity.

According to section 4.3.2 of EN 1991-1-4, the roughness factor can be determined as follows:

$$c_r(z) = k_r \cdot \ln\left(\frac{z}{z_0}\right) \quad for \quad z_{min} \leq z \leq z_{max}$$
$$c_r(z) = c_r(z_{min}) \quad for \quad z \leq z_{min}$$

where:

z_0 and z_{min} are defined according to the terrain category:

	Terrain category	z_0	z_{min}
0	Sea or coastal area exposed to the open sea	0,003	1
I	Lakes or flat and horizontal area with negligible vegetation and without obstacles	0,01	1
II	Area with low vegetation such as grass and isolated obstacles (trees, buildings) with separations of at least 20 obstacle heights	0,05	2
III	Area with regular cover of vegetation or buildings or with isolated obstacles with separations of maximum 20 obstacle heights (such as villages, suburban terrain, permanent forest)	0,3	5
IV	Area in which at least 15% of the surface is covered with buildings and their average height exceeds 15 m	1,0	10

k_r is the terrain factor calculated using:

$$k_r = 0{,}19 \cdot \left(\frac{z_0}{z_{0,II}}\right)^{0{,}07}$$

with: $z_{0,II} = 0{,}05\ m$

Wind turbulence

The turbulence intensity $I_v(z)$ at a height z is defined as the standard deviation of the turbulence divided by the mean wind velocity and it can be determined as:

$$I_v(z) = \frac{\sigma_v}{v_m(z)} = \frac{1}{c_o(z) \cdot \ln\left(\frac{z}{z_0}\right)} \quad for \quad z_{min} \le z \le z_{max}$$

$$I_v(z) = I_v(z_{min}) \quad for \quad z \le z_{min}$$

Peak velocity pressure

The peak velocity pressure $q_p(z)$ at a height z can be determined as:

$$q_p(z) = [1 + 7 \cdot I_v(z)] \cdot \frac{1}{2} \cdot \rho \cdot v_m^2(z) = c_e(z) \cdot q_b$$

where:

$I_v(z)$ is the turbulence intensity;

ρ is the air density taken as 1.25 kg/m^3;

$v_m(z)$ is the mean wind velocity;

$c_e(z)$ is the exposure factor defined as $c_e(z) = \frac{q_p(z)}{q_b}$;

q_b is the basic wind pressure defined as $q_b = \frac{1}{2} \cdot \rho \cdot v_b^2$.

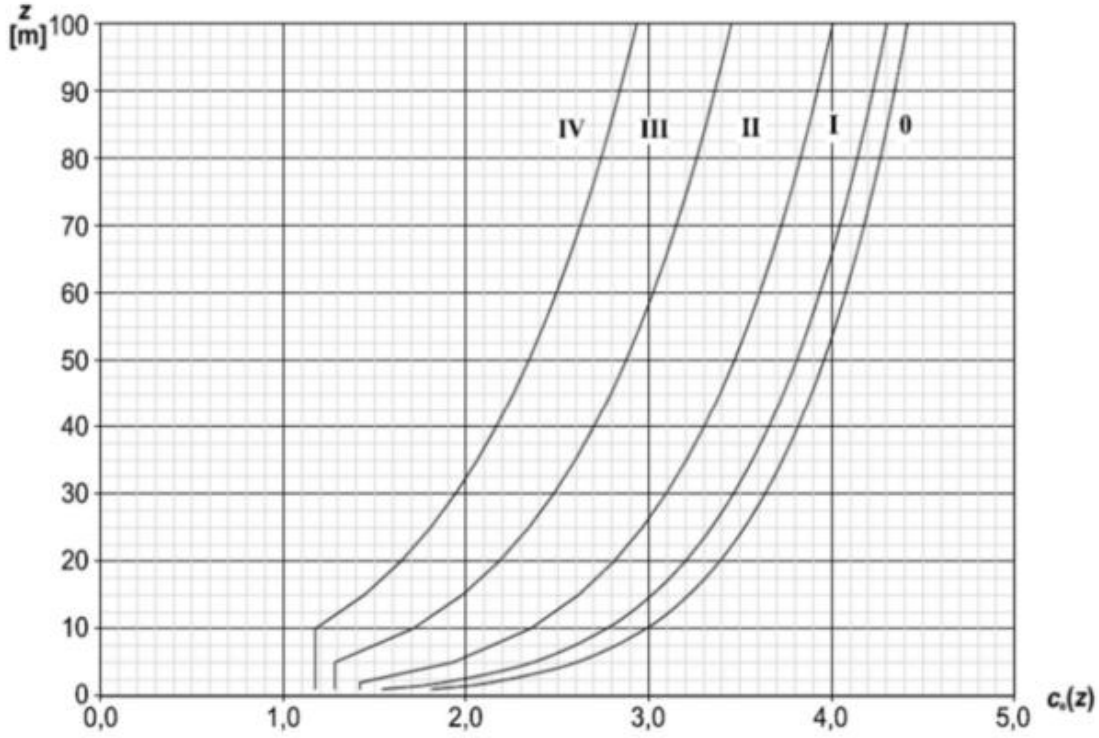

Figure 4.2 — Illustrations of the exposure factor $c_e(z)$ for c_0=1,0, k_I=1,0

The basic wind pressure results to be equal to:

q_b 360 N/m^2

Wind pressure on surfaces

The wind pressure acting on the external surfaces can be determined according to:

$$w_e(z_e) = q_p(z_e) \cdot c_{pe}$$

The wind pressure acting on the internal surfaces can be determined according to:

$$w_i(z_i) = q_p(z_i) \cdot c_{pi}$$

where:

c_{pe} is the pressure coefficient for the external pressure that can be calculated according to section 7.2 of EN 1991-1-4 or according to data supported by appropriate documentation or by experimental campaigns in wind tunnel;

c_{pi} is the pressure coefficient for the internal pressure

The reference heights z_e to be considered in the calculation of the peak reference wind pressure are defined as follows:

- Windward surfaces of walls: the reference height changes along the structure height in accordance with point 7.2.2 on EN 1991-1-4;
- Leeward surfaces of walls: the reference height is equal to the maximum height of the building;
- Internal pressures: the reference height is equal to the maximum height of the building.

Wind forces

The wind forces for the whole structure or a structural component can be determined by calculating forces from surface pressures according to the following equations.

External forces:

$$F_{w,e} = c_s \cdot c_d \cdot \sum_{surfaces} w_e(z_e) \cdot A_{ref}$$

Internal forces:

$$F_{w,i} = \sum_{surfaces} w_i(z_i) \cdot A_{ref}$$

where:

c_s is the size factor that takes into account the effect on wind actions from the non-simultaneous occurrence of peak wind pressures on the surfaces. It is taken equal to 1;

c_d is the dynamic factor that takes into the effect of the vibrations of the structure due to turbulence. It is taken equal to 1.

Combination No	Combination	Combination type	Components of combination (formula)
1	PCH1_I_6.10_sup	I - ULS	1.35(Gsup)1 + 1.35(Gsup)2 + 1.3(Qs)3 + 0.78(Qw)4
2	PCH2_I_6.10_sup	I - ULS	1.35(Gsup)1 + 1.35(Gsup)2 + 1.3(Qs)3 + 0.78(Qw)5
3	PCH3_I_6.10_sup	I - ULS	1.35(Gsup)1 + 1.35(Gsup)2 + 1.3(Qs)3 + 0.78(Qw)6
4	PCH4_I_6.10_sup	I - ULS	1.35(Gsup)1 + 1.35(Gsup)2 + 1.3(Qs)3 + 0.78(Qw)7
5	PCH5_I_6.10_sup	I - ULS	1.35(Gsup)1 + 1.35(Gsup)2 + 0.65(Qs)3 + 1.3(Qw)4
6	PCH6_I_6.10_sup	I - ULS	1.35(Gsup)1 + 1.35(Gsup)2 + 0.65(Qs)3 + 0.78(Qw)5
7	PCH7_I_6.10_sup	I - ULS	1.35(Gsup)1 + 1.35(Gsup)2 + 0.65(Qs)3 + 0.78(Qw)6
8	PCH8_I_6.10_sup	I - ULS	1.35(Gsup)1 + 1.35(Gsup)2 + 0.65(Qs)3 + 0.78(Qw)7
9	PCH9_I_6.10_sup	I - ULS	1.35(Gsup)1 + 1.35(Gsup)2 + 0.65(Qs)3 + 0.78(Qw)4
10	PCH10_I_6.10_sup	I - ULS	1.35(Gsup)1 + 1.35(Gsup)2 + 0.65(Qs)3 + 1.3(Qw)5
11	PCH15_I_6.10_sup	I - ULS	1.35(Gsup)1 + 1.35(Gsup)2 + 0.65(Qs)3 + 1.3(Qw)6
12	PCH20_I_6.10_sup	I - ULS	1.35(Gsup)1 + 1.35(Gsup)2 + 0.65(Qs)3 + 1.3(Qw)7
13	PCH21_IV_6.14b_sup	IV - SLS CHR	1(Gsup)1 + 1(Gsup)2 + 1(Qs)3 + 0.6(Qw)4
14	PCH22_IV_6.14b_sup	IV - SLS CHR	1(Gsup)1 + 1(Gsup)2 + 1(Qs)3 + 0.6(Qw)5
15	PCH23_IV_6.14b_sup	IV - SLS CHR	1(Gsup)1 + 1(Gsup)2 + 1(Qs)3 + 0.6(Qw)6
16	PCH24_IV_6.14b_sup	IV - SLS CHR	1(Gsup)1 + 1(Gsup)2 + 1(Qs)3 + 0.6(Qw)7
17	PCH25_IV_6.14b_sup	IV - SLS CHR	1(Gsup)1 + 1(Gsup)2 + 0.5(Qs)3 + 1(Qw)4
18	PCH26_IV_6.14b_sup	IV - SLS CHR	1(Gsup)1 + 1(Gsup)2 + 0.5(Qs)3 + 0.6(Qw)5
19	PCH27_IV_6.14b_sup	IV - SLS CHR	1(Gsup)1 + 1(Gsup)2 + 0.5(Qs)3 + 0.6(Qw)6
20	PCH28_IV_6.14b_sup	IV - SLS CHR	1(Gsup)1 + 1(Gsup)2 + 0.5(Qs)3 + 0.6(Qw)7
21	PCH29_IV_6.14b_sup	IV - SLS CHR	1(Gsup)1 + 1(Gsup)2 + 0.5(Qs)3 + 0.6(Qw)4
22	PCH30_IV_6.14b_sup	IV - SLS CHR	1(Gsup)1 + 1(Gsup)2 + 0.5(Qs)3 + 1(Qw)5
23	PCH35_IV_6.14b_sup	IV - SLS CHR	1(Gsup)1 + 1(Gsup)2 + 0.5(Qs)3 + 1(Qw)6
24	PCH40_IV_6.14b_sup	IV - SLS CHR	1(Gsup)1 + 1(Gsup)2 + 0.5(Qs)3 + 1(Qw)7
25	PCH33_VI_6.16b_sup	VI - SLS QPR	1(Gsup)1 + 1(Gsup)2

Material data

Analysis type: SHELL. Flexure, Compres.-T

Reinforcement by theory: Wood

System: Unbraced element

Analysis

- [ ] Analyse transverse reinforcement per 1 sq.m.
- [ ] Normative properties of materials for specific/emergency combination
- [ ] Account of fire resistance
- [ ] Ductility

Analysis precision, %

Preliminary	20
Basic	1

% of reinforcement

MIN	0.05
MAX	10

Range for bearing capacity coefficients: MIN 0.9 MAX 1.5

Distance to g.c. of reinforcement



A1X 50 mm A1Y 60 mm



A2X 50 mm A2Y 60 mm

Reinforcement for punching shear analysis: Ax 0 Ay 0 (%) (cm2)

- [x] Analysis by serviceability limit states (SLS)

Cracks (long-term), mm: 0.3

Cracks (short-term), mm: 0.4

(•) Spacing of rebars, mm: 100

( ) Diameter of rebars

- [ ] Set coefficient ψs=1 for analysis

- [ ] Effective height of wall

Height of wall: 1 m ( ) Effective height (•) Factor: 1

Reinforcement: Asymmetric

Class of concrete: C35/45 + -

Type of concrete: heavyweight

Grade of lightweight concrete by average density: 1000

Diagram: bilinear stress-strain diagram of

Relative humidity, %: 80

Coefficients

α_{ct} 1 η 1 k_1 1 k_2 0.45

Creep coefficient $\varphi_{(\infty,tn)}$ 2

	Basic	Emerg	Earth	SLS
α_{cc}	0.9	0.85	1	1
γ_c	1	1.2	1.3	1

Accidental eccentricities (bar)

along section height EY: 0 mm

along section width EZ: 0 mm

- [x] Exact geometrical parameters in design
- [x] First order effects (Geometric imperfections)
- [x] Second order effects: Stiffness
- [x] Compute coefficient α_{cw}

	C35/45 (MPa)
E_cm	34000.00
f_ck	35.00
f_ck_cube	45.00
f_cm	43.00
f_ctm	3.20
f_ctk_005	2.20
f_ctk_095	4.20
Eps_c1 (*1000)	2.25
Eps_cu1 (*1000)	3.50

Reinforcement

	Longitudinal	Transverse
Class	B	B
Type	Rebars	Rebars
f_{yk} MPa	500	500
$k=f_{tk}/f_{yk}$	1.08	1.08
ε_{uk},%	5	5
γ_s Basic	1.1	1.1
γ_s Emerg	1	1
γ_s Earth	1	1
γ_s SLS	1	1

Tied reinforcing ca | Ø max 32 | 1

Coefficients: k_3 0.8 k_4 1

Analysis of transverse reinforcement

θ°	Basic	Emerg	Earth
	Ana 45	Ang 45	Ang 45

cotθ ( ) Limit with length of StE

MPa	Longitudinal	Transverse
f_yk	500.00	500.00
Class	B	B
D (mm)	6-40	6-40
f_yd	454.55	454.55
f_tk	540.00	540.00
f_ywd	363.64	363.64
Es	200000.00	200000.00
k=f_tk/f_yk	1.08	1.08
eps_uk, %	5.00	5.00

Steel S355

Elastic material properties

Density = 7850.0 kg/m3

Young Modulus E = 210000 N/mm2

Poisson Ratio ν = 0.3

Transversal Young Modulus G = 80769 N/mm2

Thermic dilatation coefficient = 0.000012 /°C

Strength properties according to Eurocode 3 : EN 1993-1-1/3 (LT)

Strength :

thickness (mm)	0.0 - 40.0	40.0 - 150.0
yield strength fy (N/mm²)	355.0	335.0
ultimate stength fu (N/mm²)	490.0	470.0

Security coefficient :

γM0 = 1.00

γM1 = 1.00

γM2 = 1.25

γM3 = 1.25

γM4 = 1.00

γM5 = 1.00

γM6 = 1.00

γM7 = 1.10

Mx (kNm/m)

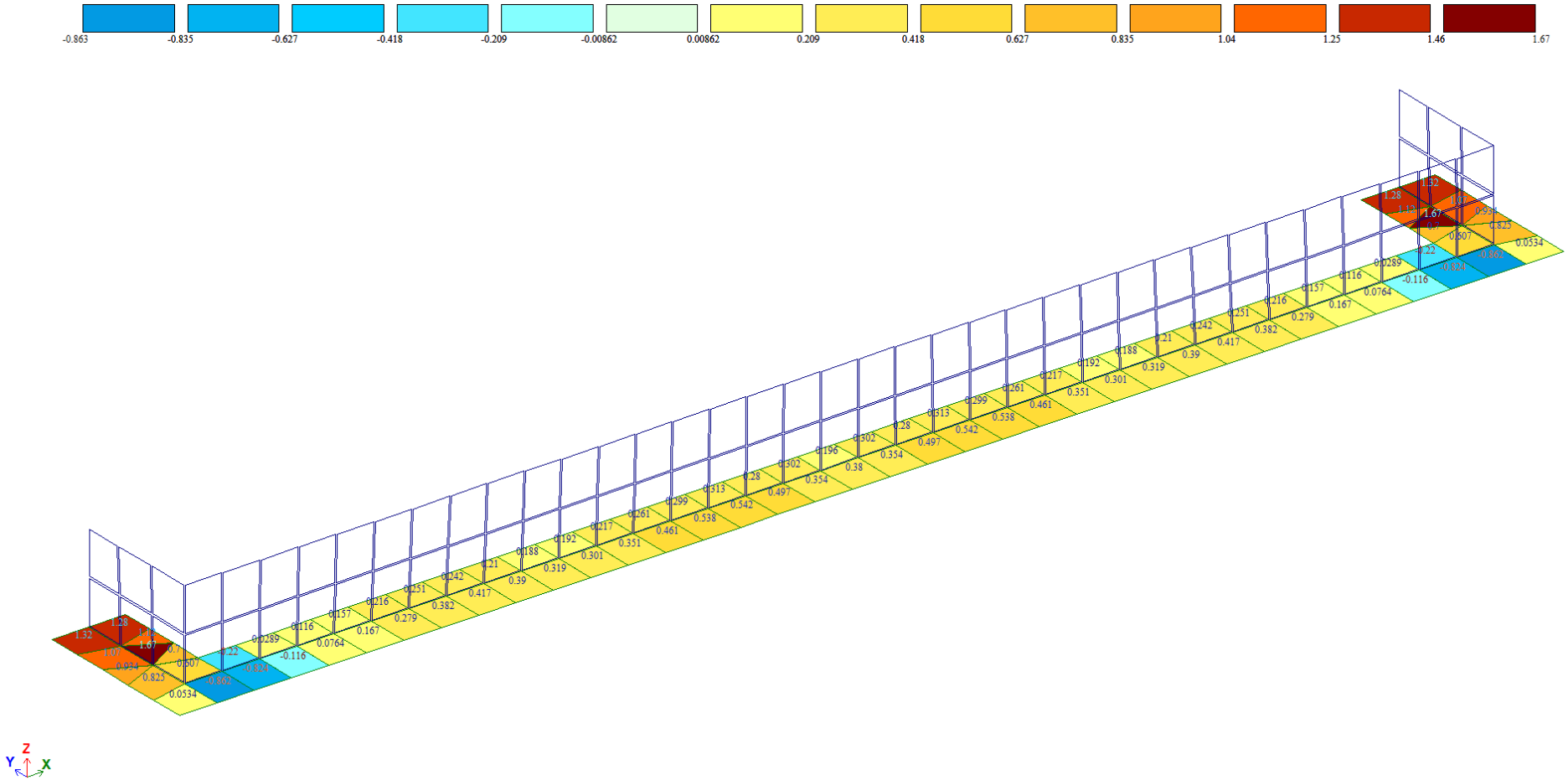
-0.863
-0.835
-0.627
-0.418
-0.209
-0.00862
0.00862
0.209
0.418
0.627
0.835
1.04
1.25
1.46
1.67
Z
Y
X

My (kNm/m)

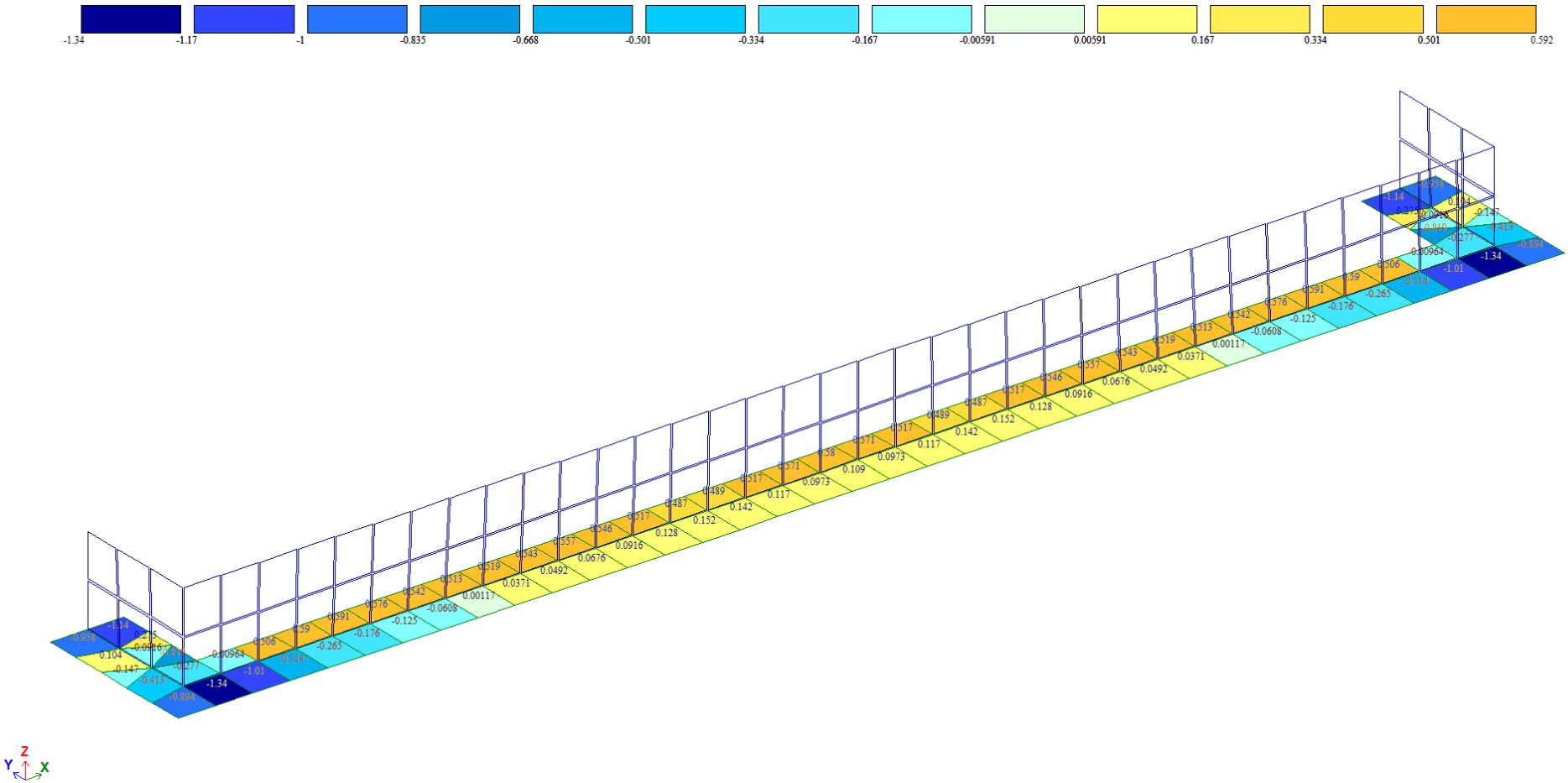
-1.34
-1.17
-1
-0.835
-0.668
-0.501
-0.334
-0.167
-0.00591
0.00591
0.167
0.334
0.501
0.592
Z
Y
X

Vx (kN/m)

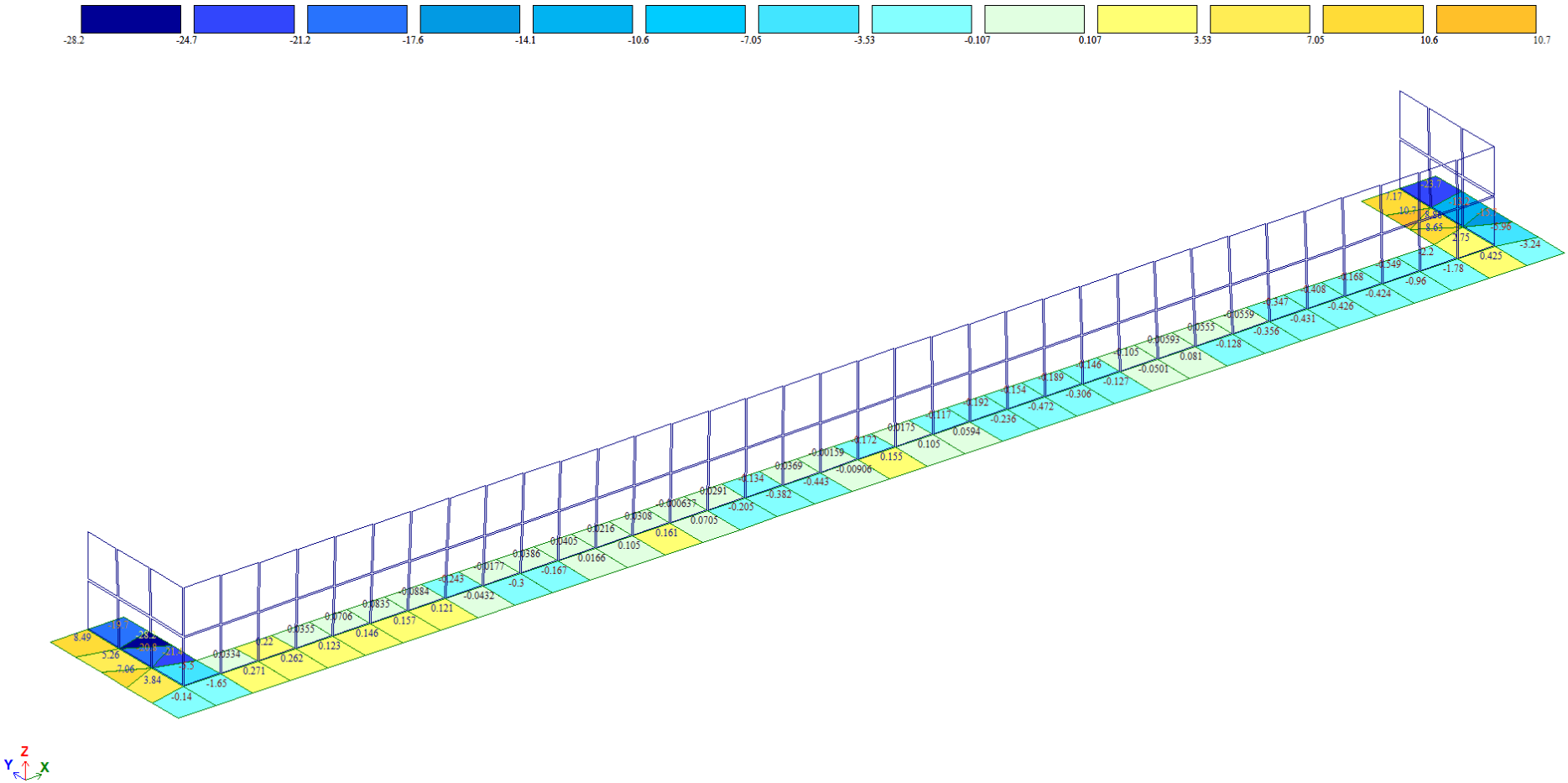

Vy (kN/m)

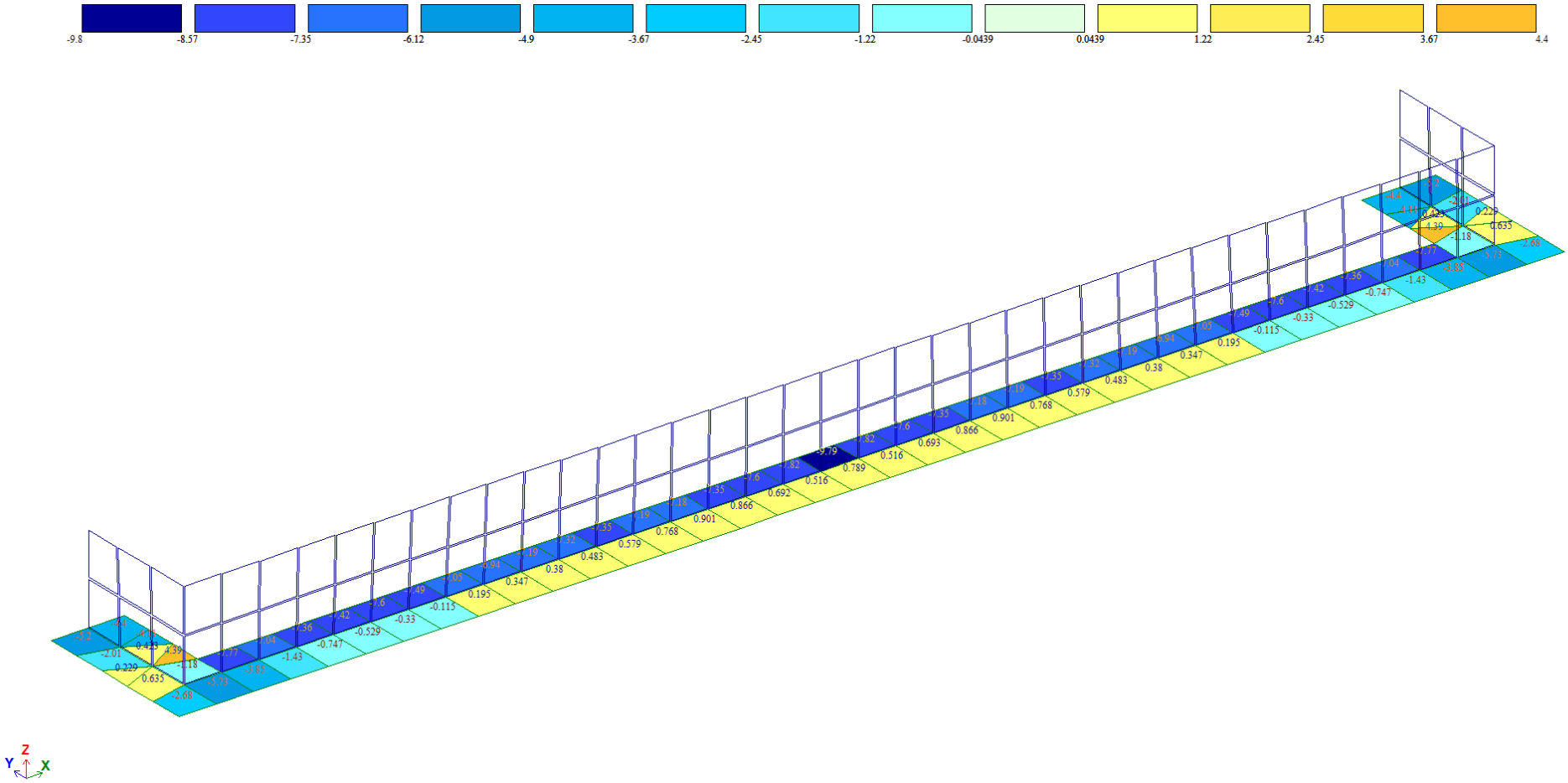

Reinforcement requirement in the x-direction of the top layer of the foundation plate

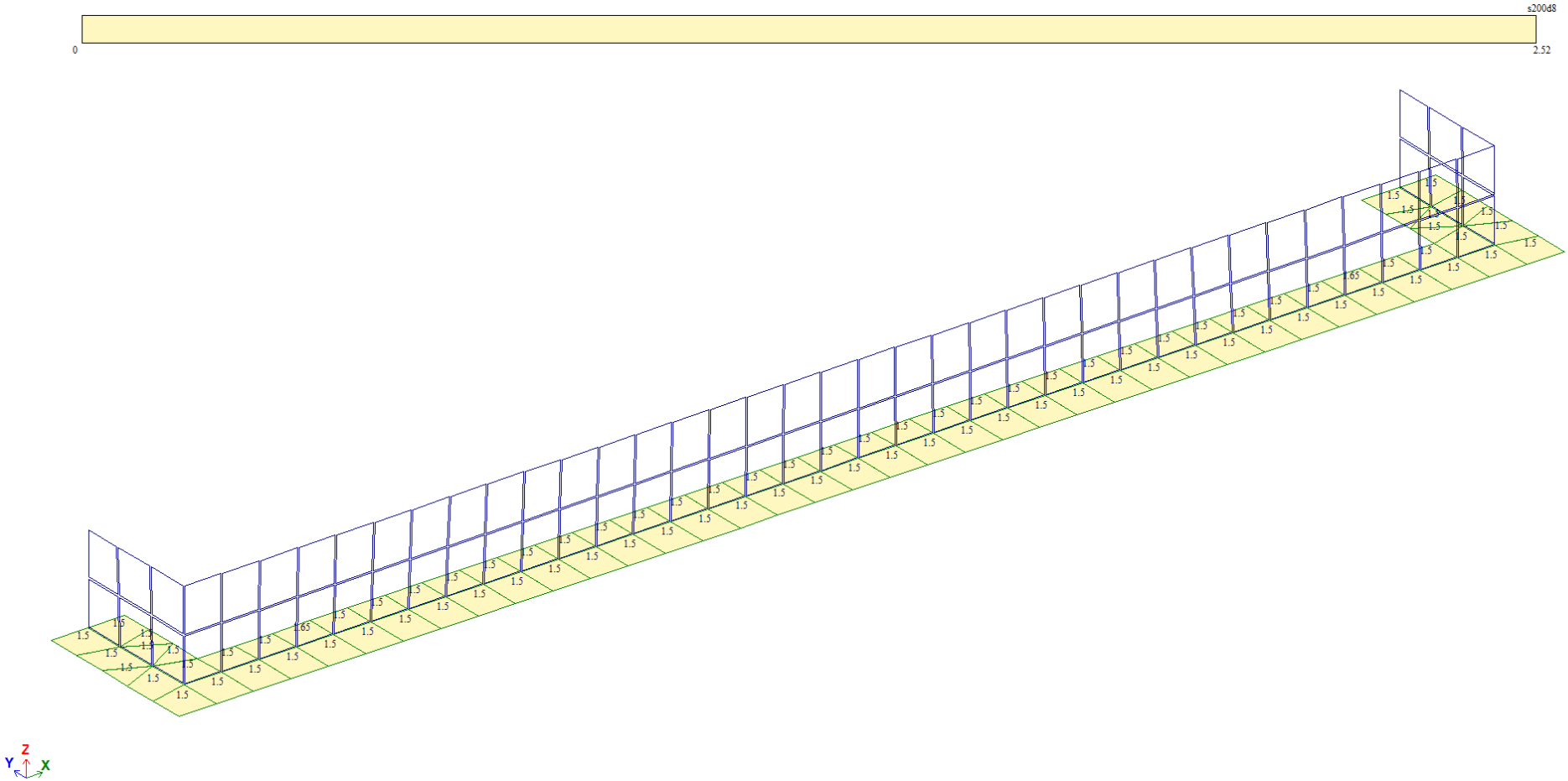

Reinforcement requirement in the y-direction of the top layer of the foundation plate

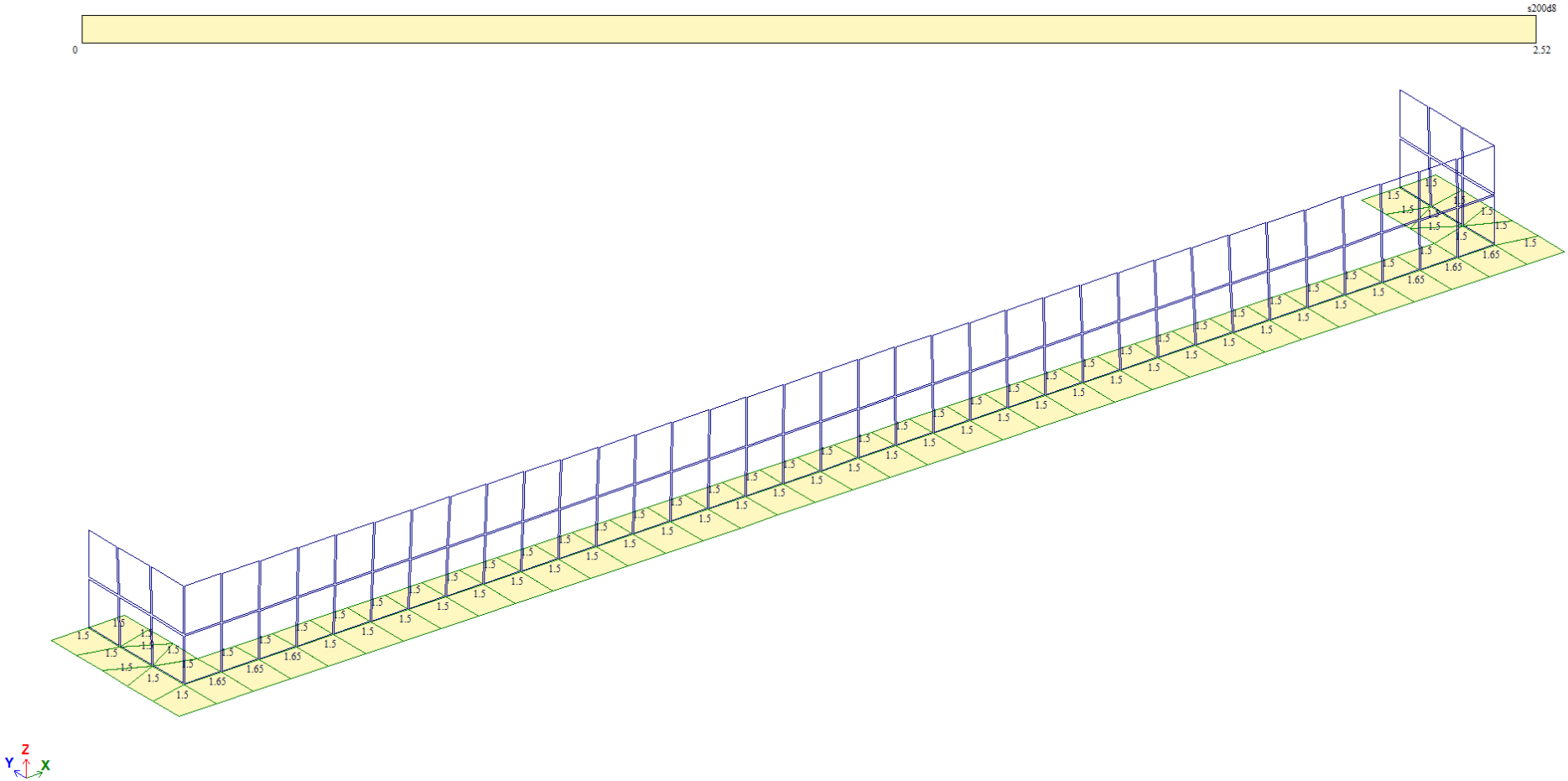

Reinforcement requirement in the x-direction of the bottom layer of the foundation plate

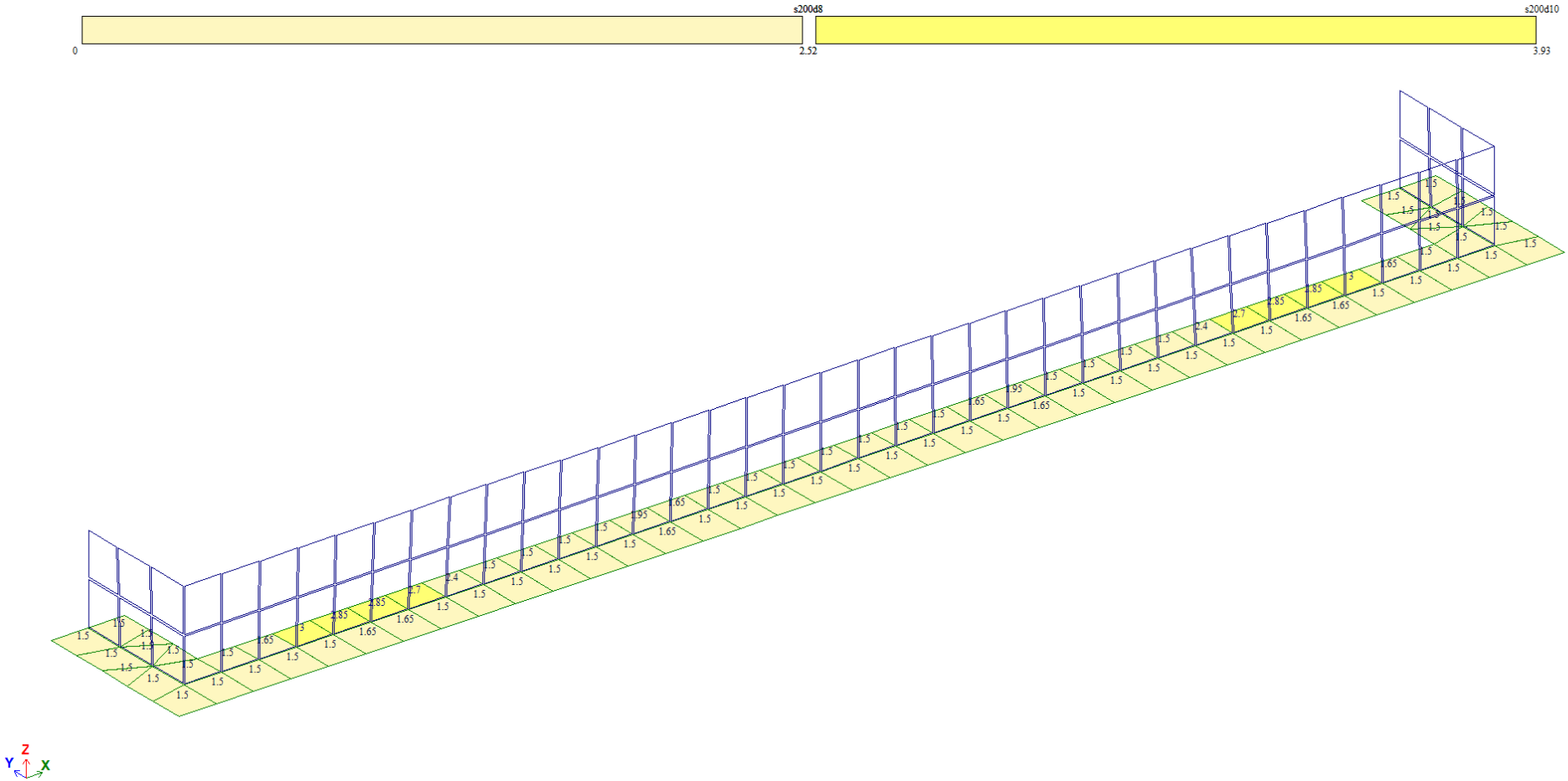

Reinforcement requirement in the y-direction of the bottom layer of the foundation plate

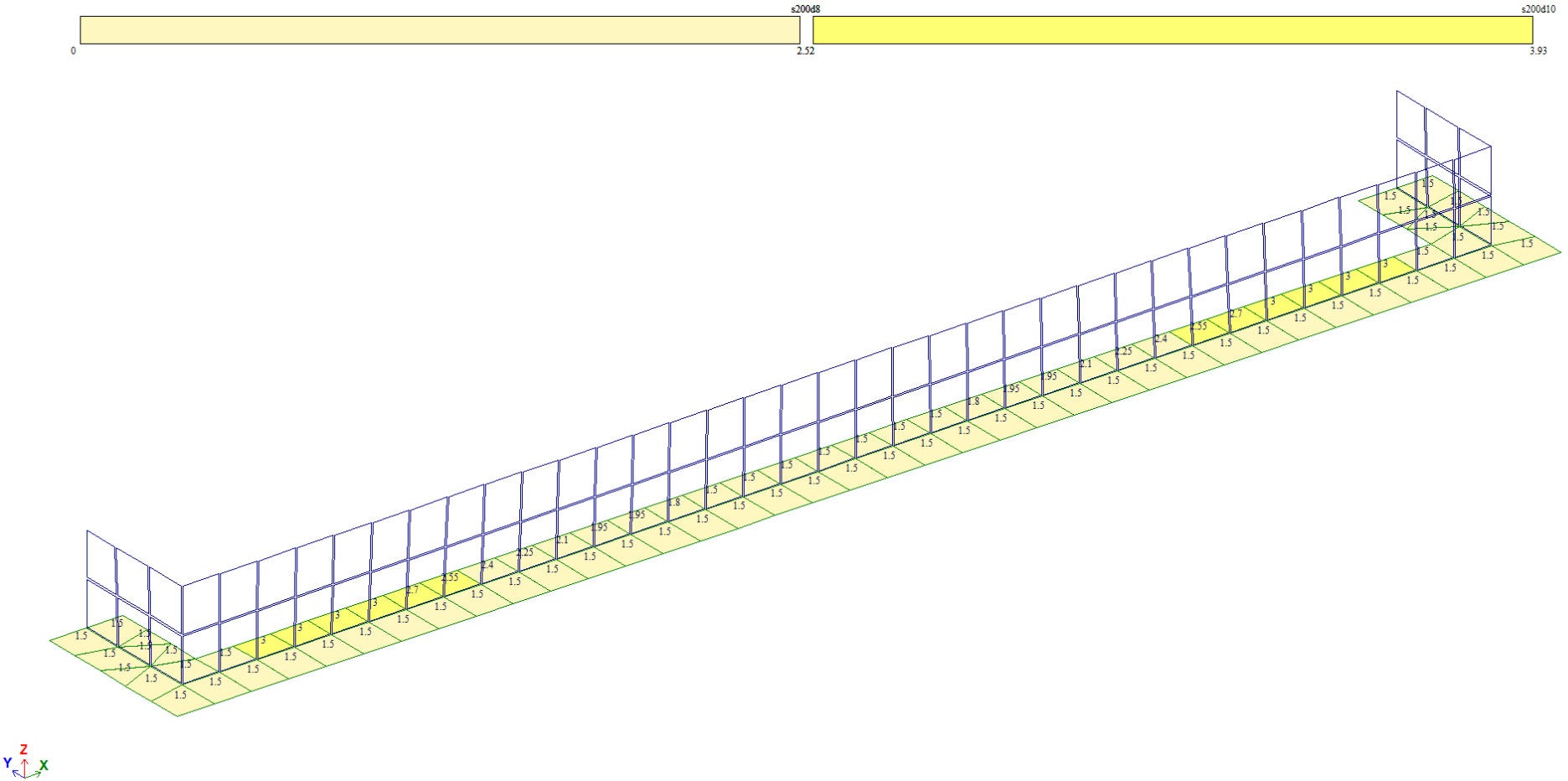

DIMENSIONS, TYPE	CONCRETE	REINFORCEMENT	
Thickness: H = 300.00 mm	C35	Longitudinal	Transverse
Distance to g.c. of reinforcem.:	fck=35.0	500	500
bottom: 50; top: 50 mm	fcm=43.0	fyk = 500.0	500.0
bottom: 60; top: 60 mm (Y)	fctk005=2.2	fyd = 454.5	454.5
Step of rebars 100 mm	fctk095=4.2	ftk = 540.0	540.0
Analysis by Wood method	Ec=34000.0	fywd = 363.6	363.6
		Es = 2e+005	2e+005
		Maximum diameter 28.00 mm	
		[Units of measurement = MPa]	

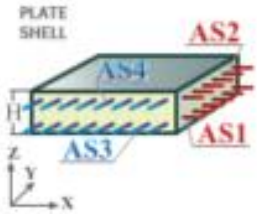

Partial safety factors for concrete

Coefficient takes into account the influence of long-term processes on the tensile strength and the adverse effects resulting from the method of load application, Act	1.00
Correction factor to reduce concrete strength values based on tests of final structure or element	1.00
Coefficient k1 (sect.7.2(2)) takes into account the limitation of compressive stress in concrete	1.00
Coefficient k2 (sect.7.2(3)) takes into account the creep in concrete	0.45
Coefficient takes into account the influence of long-term processes on the compressive strength and the adverse effects resulting from the method of load application, Acc	
Acc, Combinations: Main = 0.90; Emergency = 0.85; Earthquake = 1.00; For SLS = 1.00	
Partial safety factor for concrete, Yc	
Yc, Combinations: Main = 1.00; Emergency = 1.20; Earthquake = 1.30; For SLS = 1.00	

Partial safety factors for reinforcement

Partial safety factor for reinforcement. Longitudinal reinforcement, Ys	
Ys X, Combinations: Main = 1.10; Emergency = 1.00; Earthquake = 1.00; For SLS = 1.00	
Partial safety factor for reinforcement. Transverse reinforcement, Ys	
Ys P, Combinations: Main = 1.10; Emergency = 1.00; Earthquake = 1.00; For SLS = 1.00	
Coefficient k3 (sect.7.2(5)) takes into account the limitation of tensile stress in reinforcement	0.80
Coefficient k4 (sect.7.2(5)) takes into account the limitation of tensile stress in reinforcement in case of forced strain.	1.00

REINFORCEMENT (Analysis of reinforcement)

AS1	AS2	AS3	AS4	% X	% Y	% X+Y	ASW1	ASW2	Cr.st.	Cr.lt.
1.50	1.80	1.65	2.25	0.11	0.13	0.24			0.40	
1.50	1.50	1.50	1.50							

Notation in the reinforcement table:
AS1 - area of lower reinforcement along the X-axis [cm2/m];
AS2 - area of upper reinforcement along the X-axis [cm2/m];
AS3 - area of lower reinforcement along the Y-axis [cm2/m];
AS4 - area of upper reinforcement along the Y-axis [cm2/m];
% X - percentage of longitudinal reinforcement (AS1, AS2) along X;
% Y - percentage of longitudinal reinforcement (AS3, AS4) along Y;
% X+Y - total percentage of longitudinal reinforcement along X and Y;
ASW1 - transverse reinforcement along the X-axis [cm2/m];
ASW2 - transverse reinforcement along the Y-axis [cm2/m];
Cr.st - width of short-term crack propagarion [mm];
Cr.lt - width of long-term crack propagarion [mm];
+ - reinforcement selected with account of fire resistance
+ - reinforcement selected with account of fire resistance
Line 1 - whole reinforcement, determined according to serviceability limit state
Line 2 - reinforcement, determined according to ultimate limit states
Line + - reinforcement selected with account of fire resistance
Line + - reinforcement selected with account of fire resistance
Notation in the table of combinations:
DC - design combinations
B - combinations that take account of all loadings
A - combinations that take account of loadings with duration
Earthquake - S - combination that contains earthquake load

Mx (kNm/m)

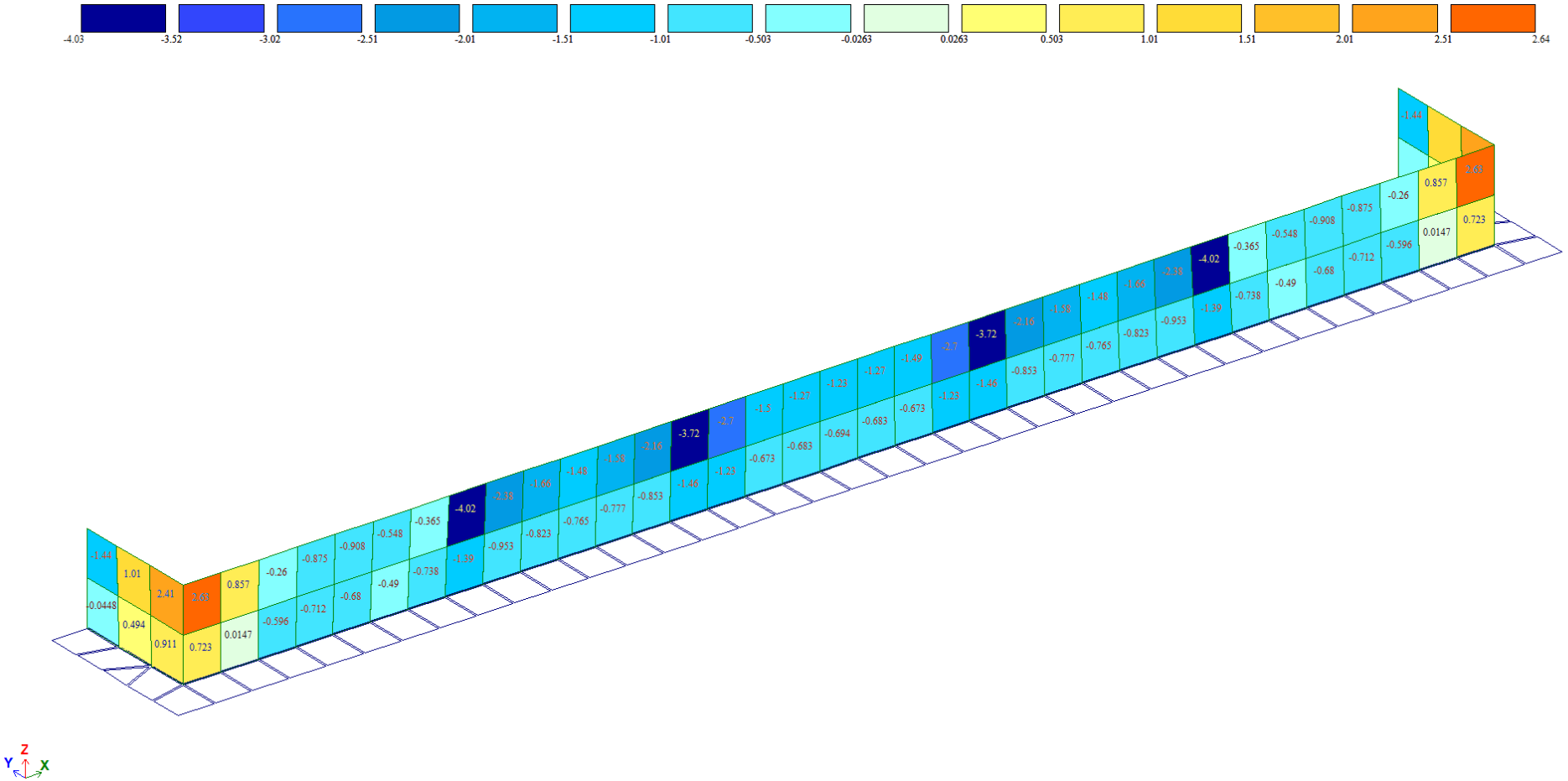
-4.03
-3.52
-3.02
-2.51
-2.01
-1.51
-1.01
-0.503
-0.0263
0.0263
0.503
1.01
1.51
2.01
2.51
2.64
Z
Y
X

My (kNm/m)

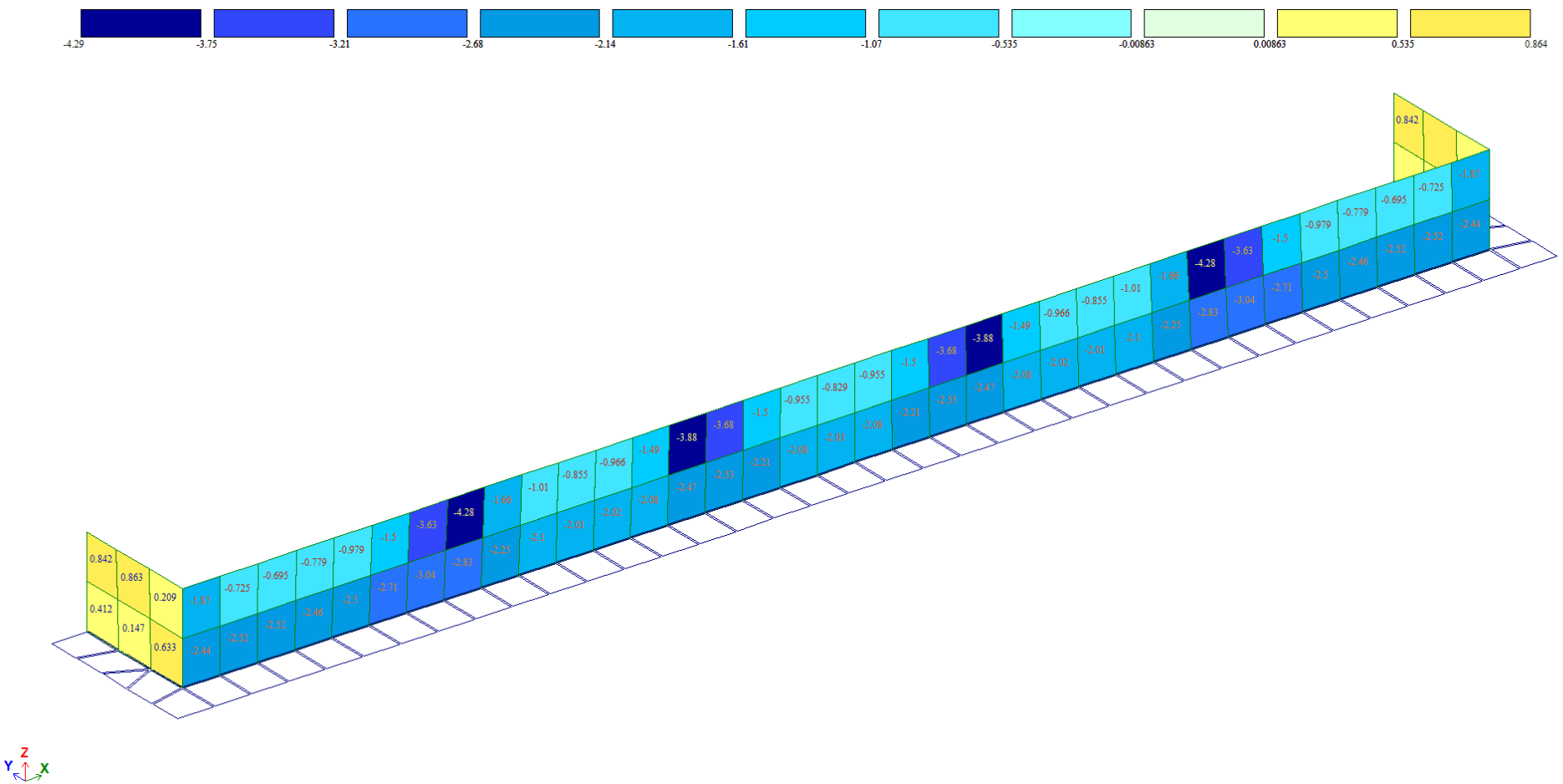

Vx (kN/m)

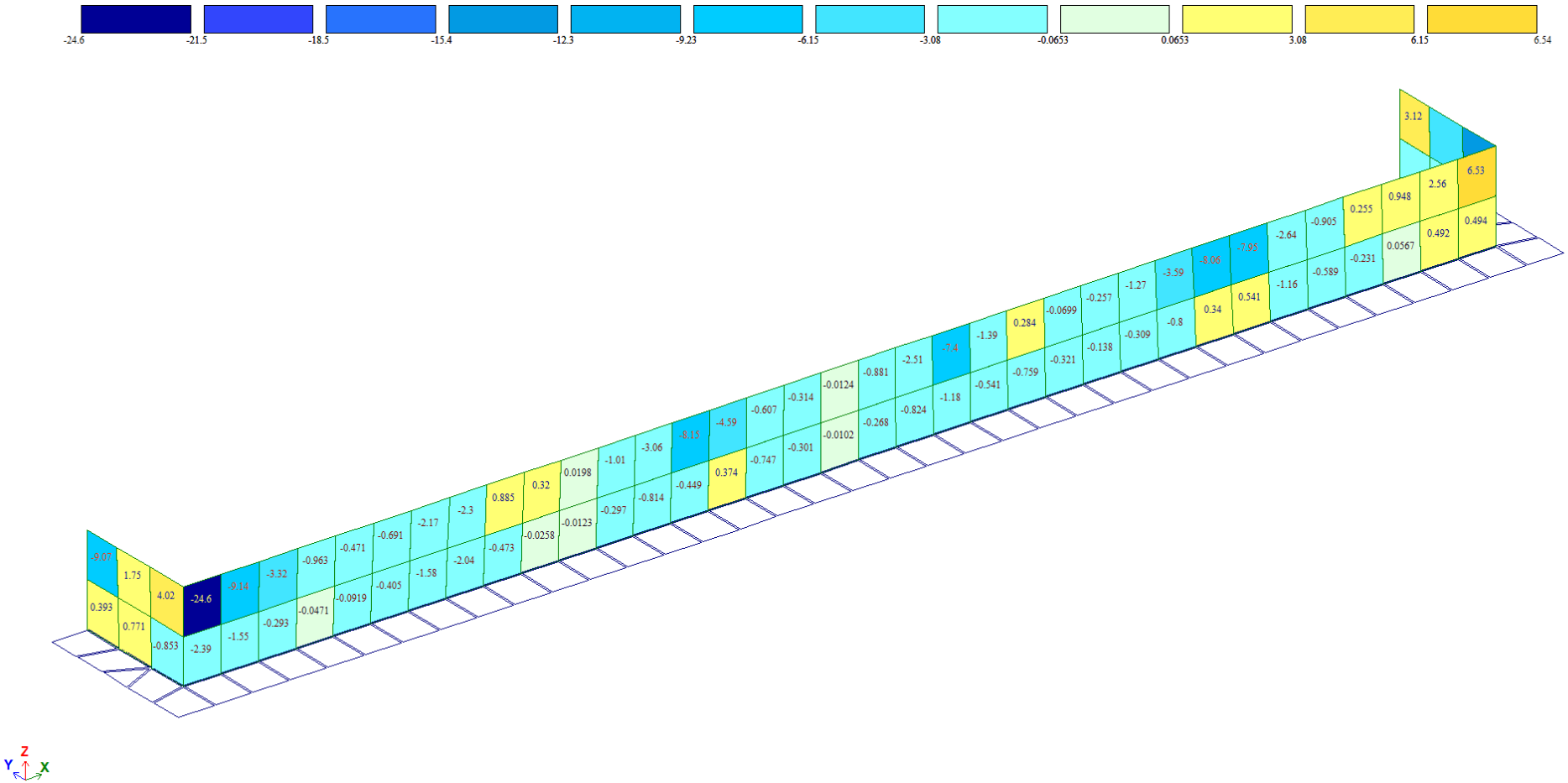

Vy (kN/m)

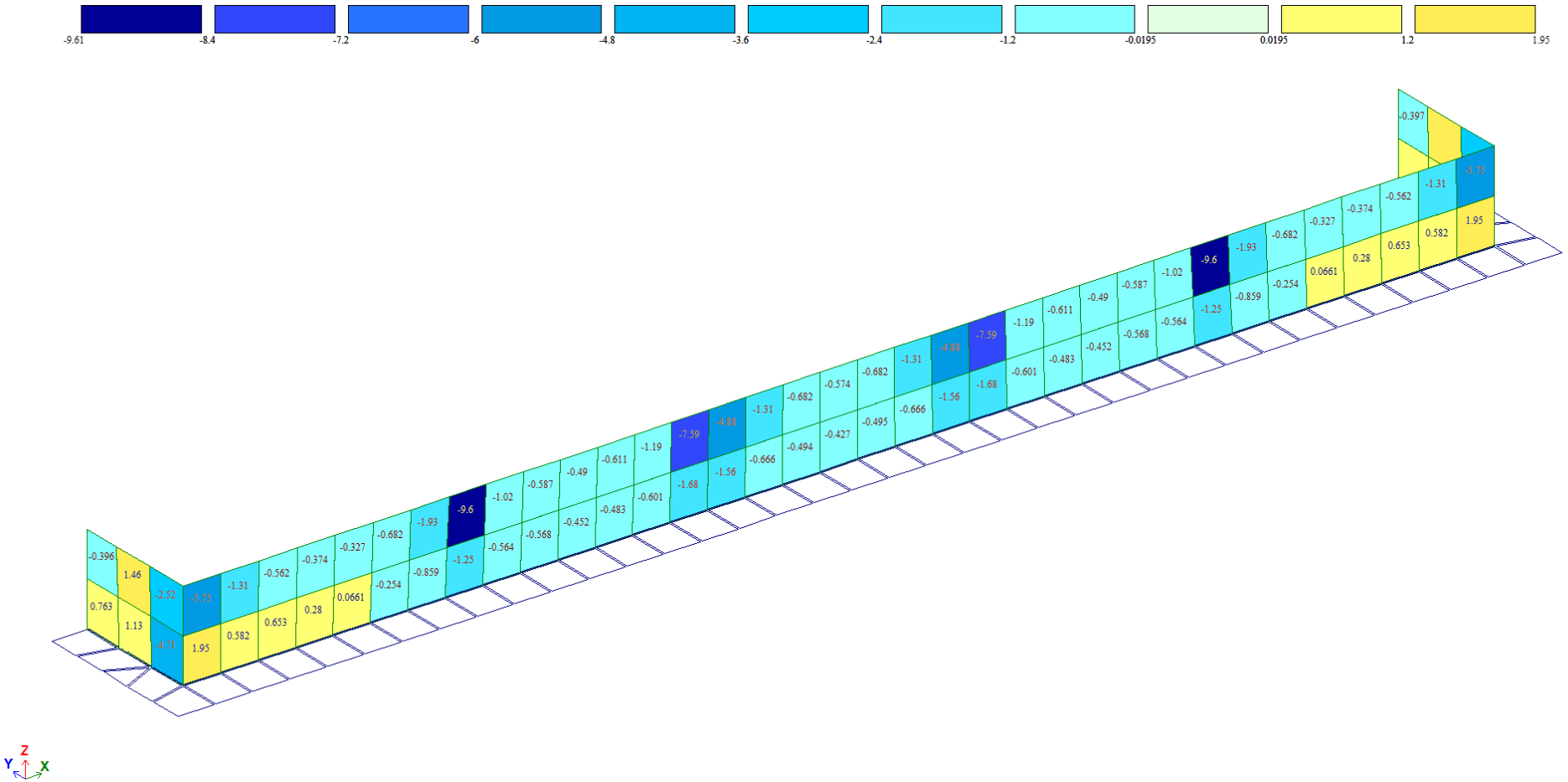

Horizontal wall reinforcement requirement

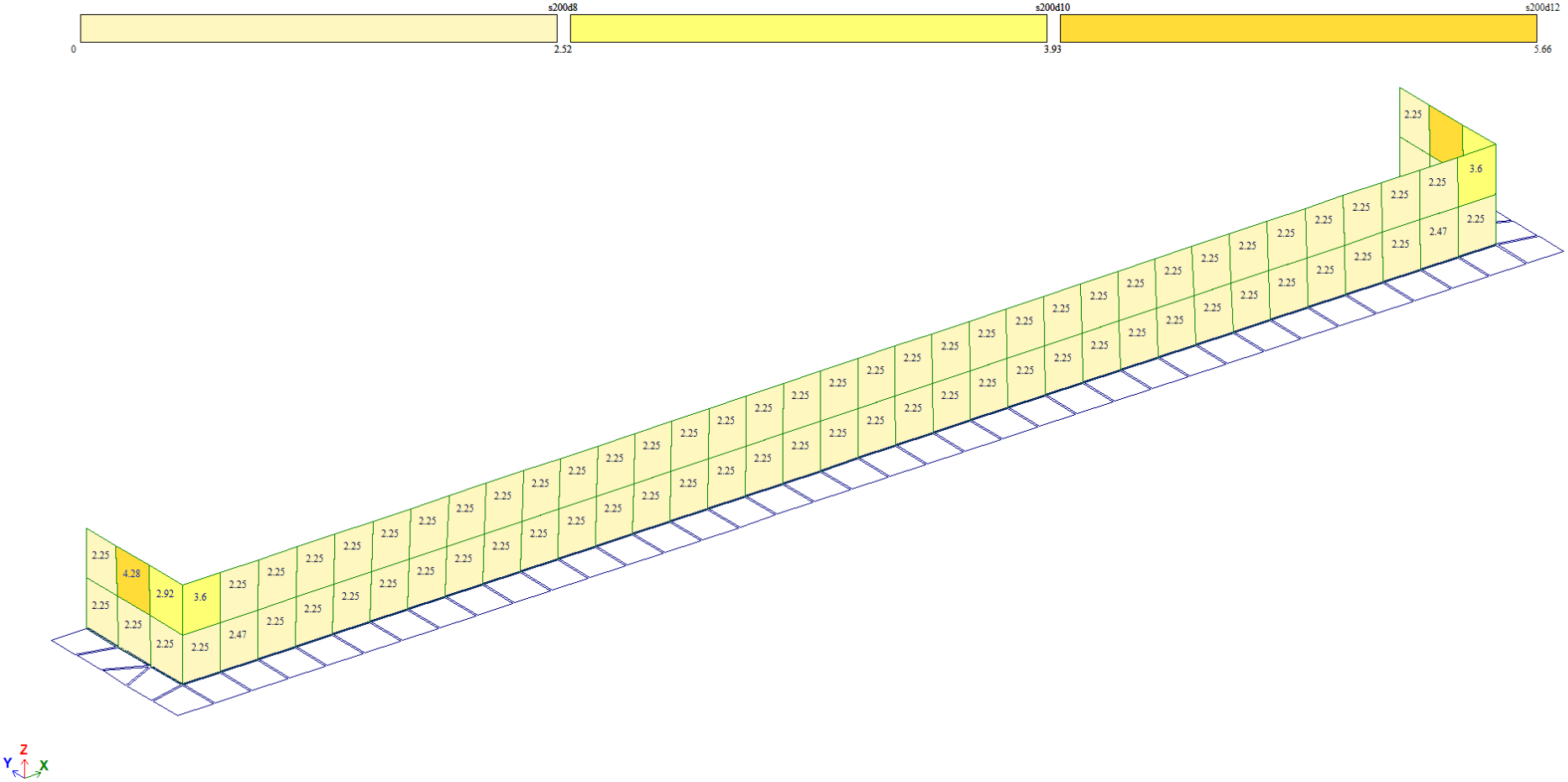

Vertical wall reinforcement requirement

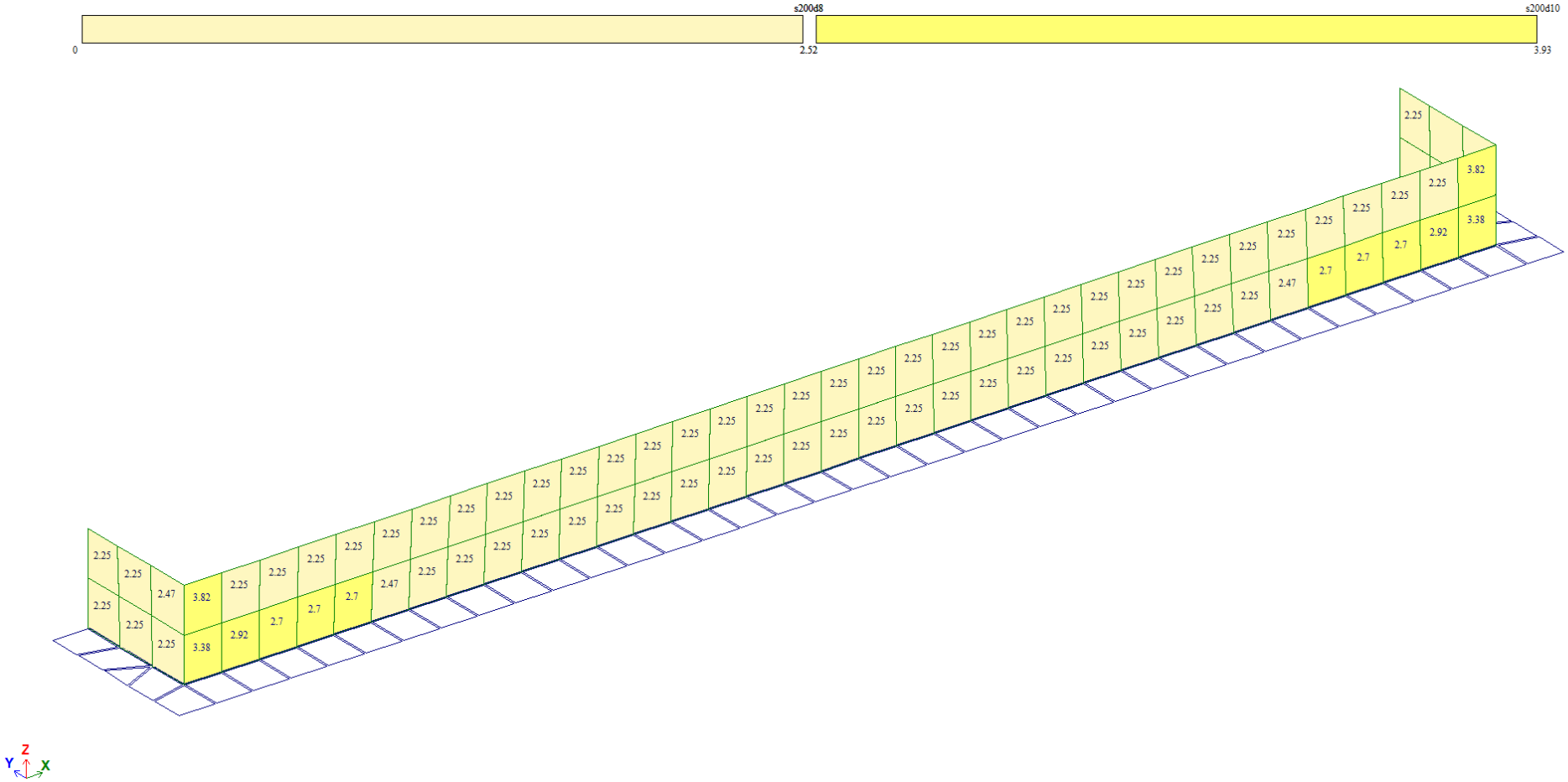

DIMENSIONS, TYPE	CONCRETE	REINFORCEMENT	
Thickness: H = 450.00 mm	C35	Longitudinal	Transverse
Distance to g.c. of reinforcem.:	fck=35.0	500	500
bottom: 50; top: 50 mm	fcm=43.0	fyk = 500.0	500.0
bottom: 60; top: 60 mm (Y)	fctk005=2.2	fyd = 454.5	454.5
Step of rebars 200 mm	fctk095=4.2	ftk = 540.0	540.0
Analysis by Wood method	Ec=34000.0	fywd = 363.6	363.6
HW=3.00 m, HWa=3.00 m; S		Es = 2e+005	2e+005
		Maximum diameter 28.00 mm	
		[Units of measurement = MPa]	

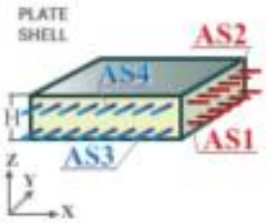

Partial safety factors for concrete

Coefficient takes into account the influence of long-term processes on the tensile strength and the adverse effects resulting from the method of load application, Act	1.00
Correction factor to reduce concrete strength values based on tests of final structure or element	1.00
Coefficient k1 (sect.7.2(2)) takes into account the limitation of compressive stress in concrete	1.00
Coefficient k2 (sect.7.2(3)) takes into account the creep in concrete	0.45
Coefficient takes into account the influence of long-term processes on the compressive strength and the adverse effects resulting from the method of load application, Acc	
Acc, Combinations: Main = 0.90; Emergency = 0.85; Earthquake = 1.00; For SLS = 1.00	
Partial safety factor for concrete, Yc	
Yc, Combinations: Main = 1.00; Emergency = 1.20; Earthquake = 1.30; For SLS = 1.00	

Partial safety factors for reinforcement

Partial safety factor for reinforcement. Longitudinal reinforcement, Ys	
Ys X, Combinations: Main = 1.10; Emergency = 1.00; Earthquake = 1.00; For SLS = 1.00	
Partial safety factor for reinforcement. Transverse reinforcement, Ys	
Ys P, Combinations: Main = 1.10; Emergency = 1.00; Earthquake = 1.00; For SLS = 1.00	
Coefficient k3 (sect.7.2(5)) takes into account the limitation of tensile stress in reinforcement	0.80
Coefficient k4 (sect.7.2(5)) takes into account the limitation of tensile stress in reinforcement in case of forced strain.	1.00

REINFORCEMENT (Analysis of reinforcement)

AS1	AS2	AS3	AS4	% X	% Y	% X+Y	ASW1	ASW2	Cr.st.	Cr.lt.
4.28	3.38	2.92	2.70	0.17	0.13	0.30		-	0.39	
2.25	2.25	2.25	2.25							

Notation in the reinforcement table:
AS1 - area of lower reinforcement along the X-axis [cm2/m];
AS2 - area of upper reinforcement along the X-axis [cm2/m];
AS3 - area of lower reinforcement along the Y-axis [cm2/m];
AS4 - area of upper reinforcement along the Y-axis [cm2/m];
% X - percentage of longitudinal reinforcement (AS1, AS2) along X;
% Y - percentage of longitudinal reinforcement (AS3, AS4) along Y;
% X+Y - total percentage of longitudinal reinforcement along X and Y;
ASW1 - transverse reinforcement along the X-axis [cm2/m];
ASW2 - transverse reinforcement along the Y-axis [cm2/m];
Cr.st - width of short-term crack propagarion [mm];
Cr.lt - width of long-term crack propagarion [mm];
+ - reinforcement selected with account of fire resistance
+ - reinforcement selected with account of fire resistance
Line 1 - whole reinforcement, determined according to serviceability limit state
Line 2 - reinforcement, determined according to ultimate limit states
Line + - reinforcement selected with account of fire resistance
Line + - reinforcement selected with account of fire resistance
Notation in the table of combinations:
DC - design combinations
B - combinations that take account of all loadings
A - combinations that take account of loadings with duration
Earthquake - S - combination that contains earthquake load

ašinių jėgų diagrama saugos ribiniam būviui (N-kN)

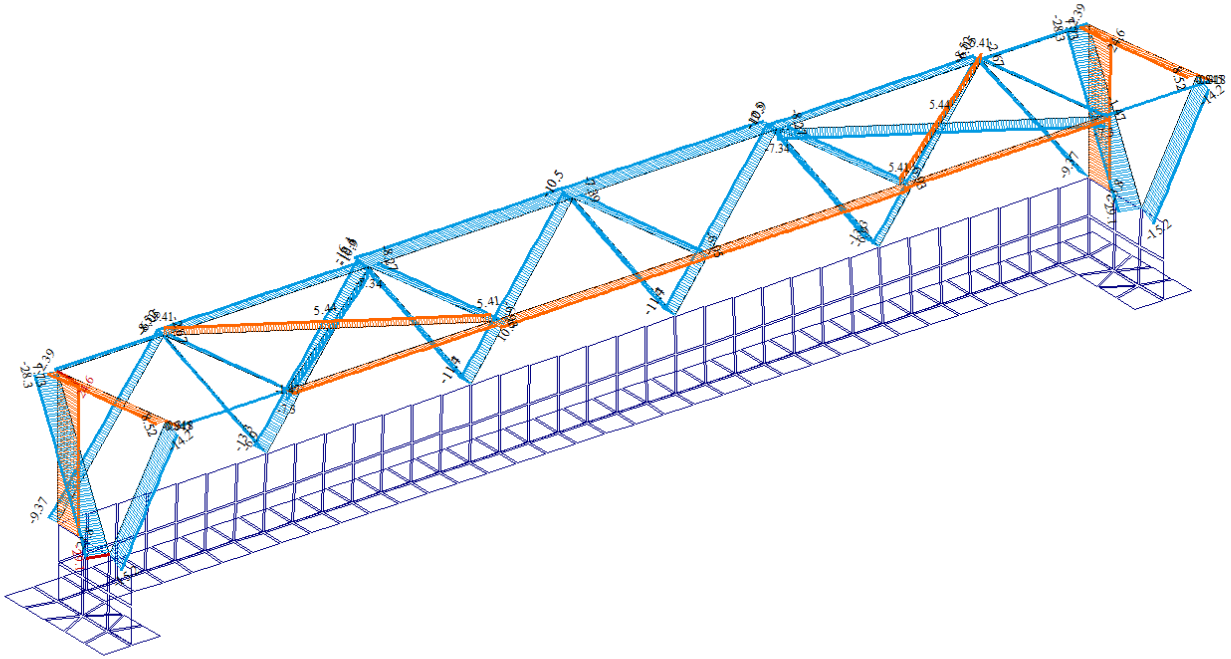

lenkiamųjų momentų My diagrama saugos ribiniam būviui (My-kNm)

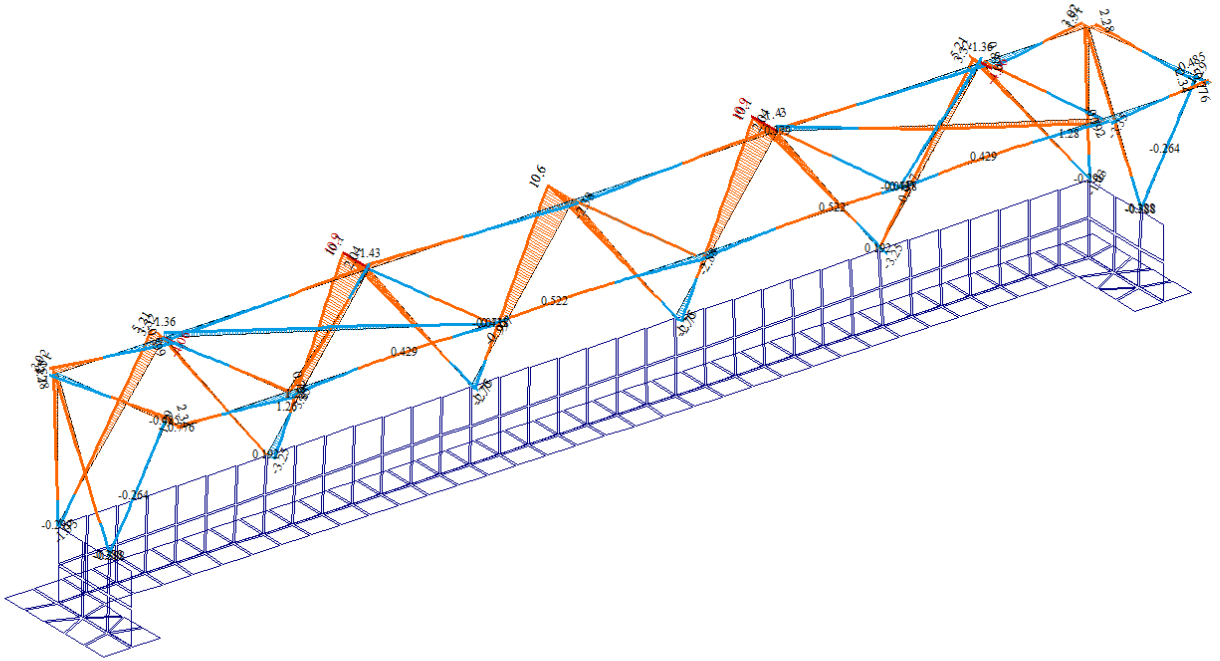

<u>Lenkiamųjų momentų Mz diagrama saugos ribiniam būviui (My-kNm)</u>

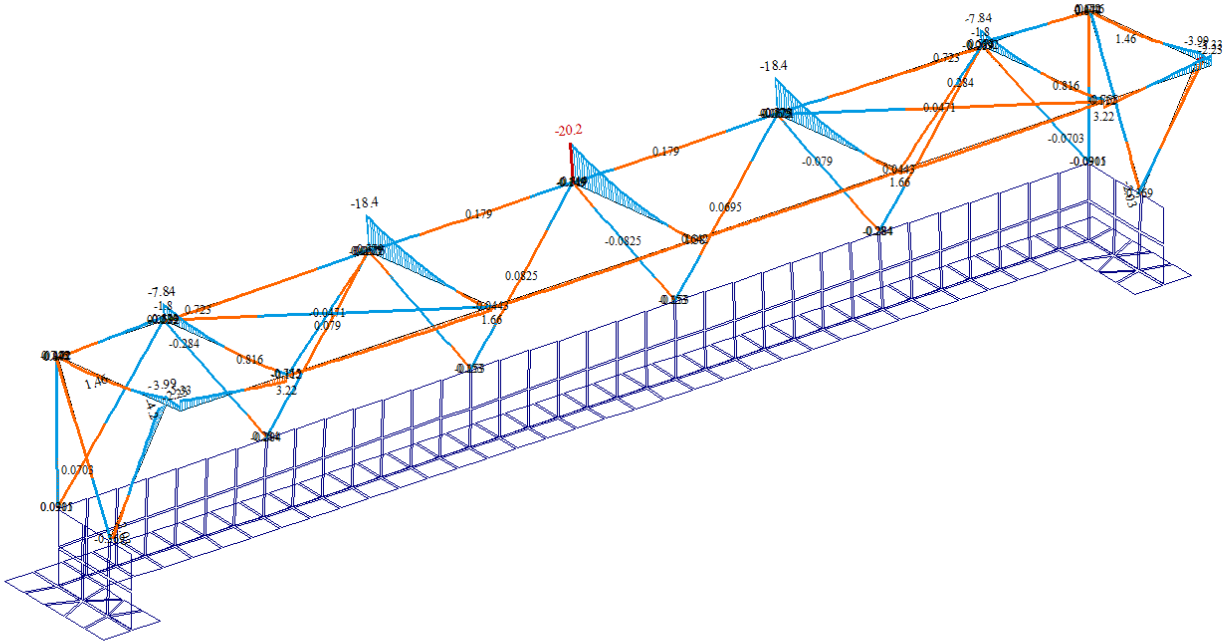

skersinių jėgų Vy diagrama saugos ribiniam būviui

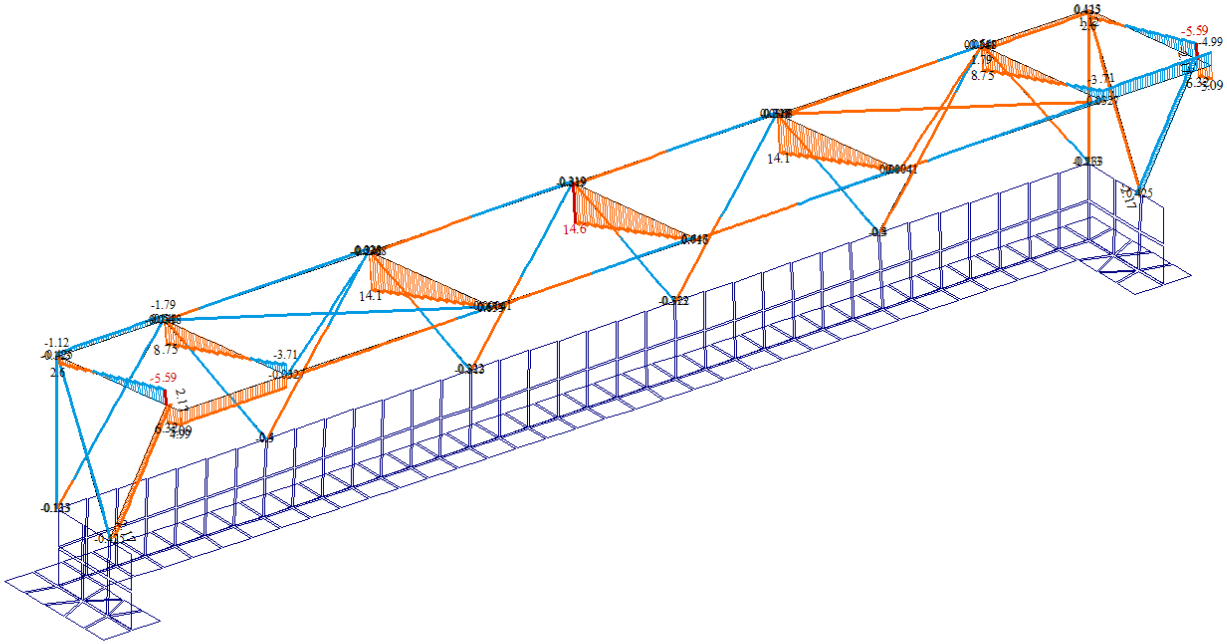

skersinių jėgų Vz diagrama saugos ribiniam būviui

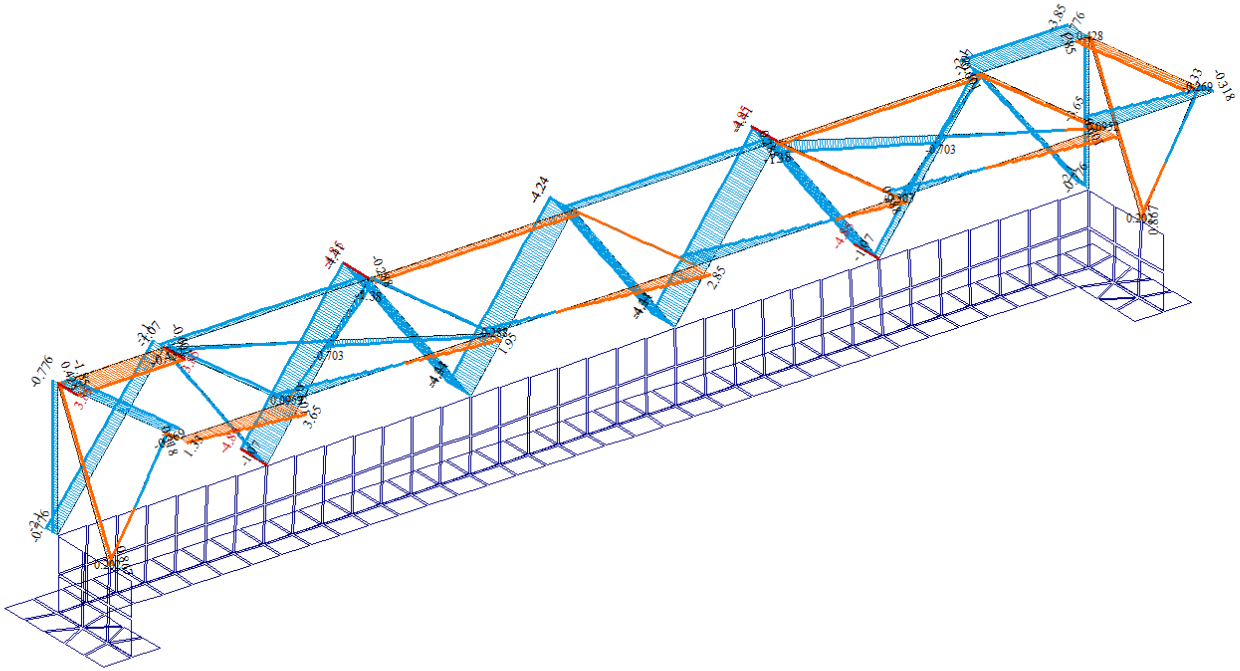
Z
X
Y

projektavimo rezultatai pagal EN1993-1-1
ULS

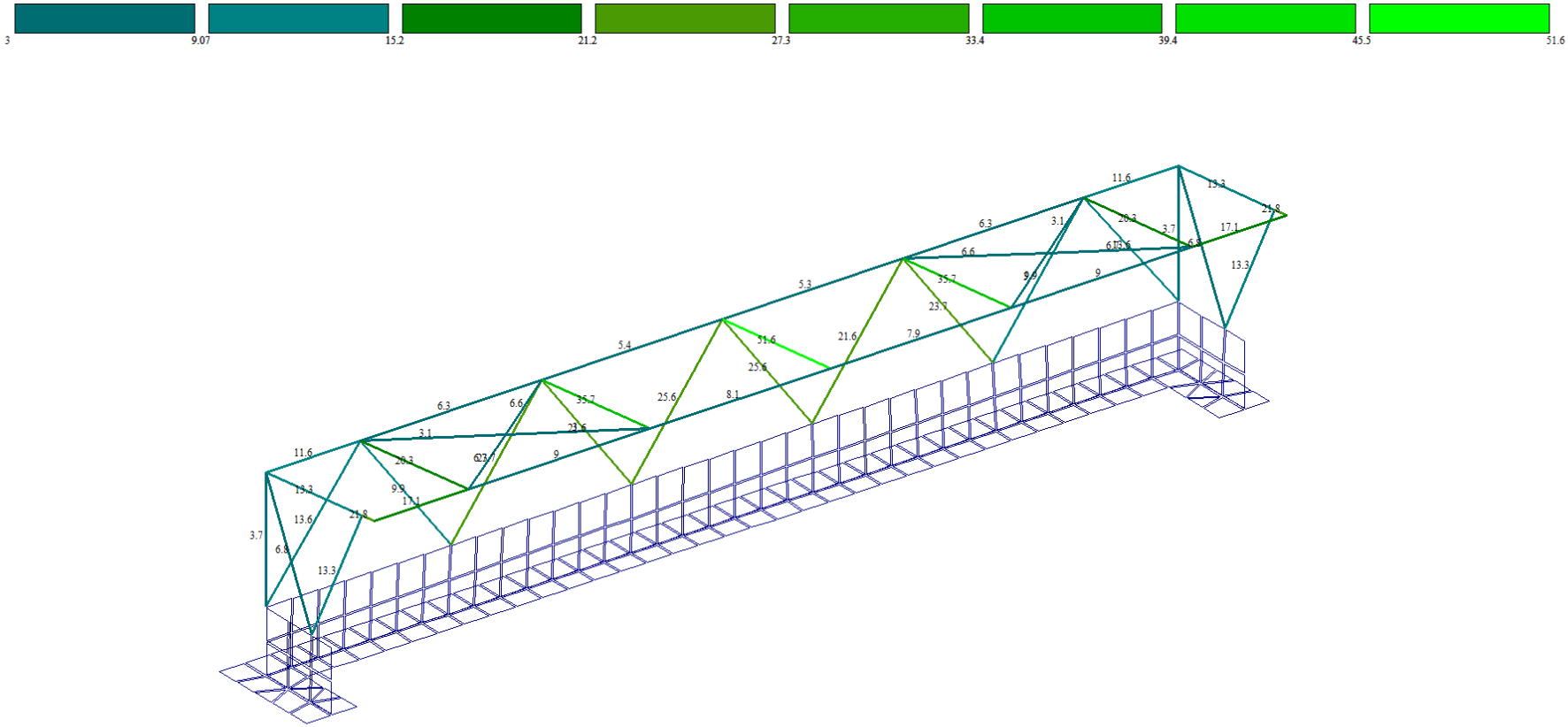

SLS



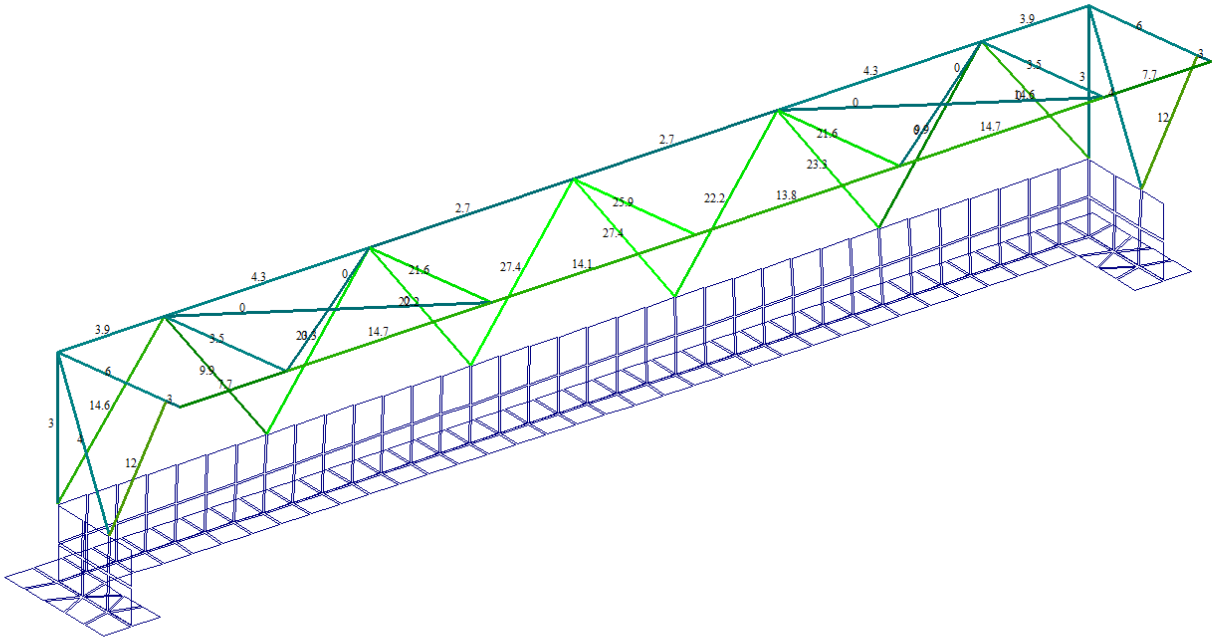



Plieninių elementų skaičiavimo rezultatų suvestinė

Dviračių stoginė 3×19 m

Nr.	Elementas	Skerspjūvis	Plienas	Patikra	Išnaudojimas, %	Išvada
1	Kolonos (statramsčiai)	SHS 150×150×10	S355J2H	Stiprumas ir pastovumas pagal LST EN 1993-1-1 6.2, 6.3	11,6	Tenkina
2	Išilginės juostos (sijos)	RHS 150×100×8	S355J2H	Stiprumas ir pastovumas pagal LST EN 1993-1-1 6.2, 6.3	51,6	Tenkina
3	Įstrižainės (spyriai)	RHS 100×60×6,3	S355J2H	Stiprumas ir pastovumas pagal LST EN 1993-1-1 6.2, 6.3	13,6	Tenkina
4	Stoginės konstrukcija – deformacijų patikra (SLS)	—	—	Įlinkis lyginant su ribine verte pagal LST EN 1990 NA	27,4	Tenkina

Beam SB24

Elemen	SÑ	Group	Class	UTILIZATION PERCENTAGES OF BEAM LOAD-BEARING CAPACITY IN SECTIONS, %											Tcr, °C	Element length, m
				Bend.	Shear	Mis.	Tors.	Buck.	Defl.	WB	FB	ULS	SLS	LB		
Section: 1. Structural tubing RHS150*100*8																
Shape: RHS150*100*8;																
File: Structural tubing from Tekla.																
Material: S355																
File: Steel from Tekla.																
32	1	SB24	1	4.143	0.2655	0	0.01565	3.11	0	5.615	5.741	4.143	0	5.741	1035	2.81
32	2	SB24	1	2.062	0.9321	0	0.01565	1.479	7.728	3.833	4.05	2.062	7.728	4.05	1100	2.81
32	3	SB24	1	3.136	1.964	0	0.01565	2.443	16.12	5.051	5.051	3.136	16.12	5.051	1076	2.81
32	4	SB24	1	10.84	2.666	0	0.01565	8.265	23.19	9.389	9.389	10.84	23.19	9.389	854	2.81
32	5	SB24	1	21.57	3.697	0	0.01565	16.38	25.86	13.2	13.2	21.57	25.86	13.2	747	2.81
32	6	SB24	1	35.09	4.4	0	0.01565	26.54	19.91	16.79	16.79	35.09	19.91	16.79	685	2.81
32	7	SB24	1	51.59	5.431	0	0.01565	38.92	1.5e-005	20.34	20.34	51.59	1.5e-005	20.34	628	2.81

**** - tracing routine is displayed for the cross-section located by default (rotation angle for the section relative to local axes is equal to zero)***

Tracing routine

Class - the highest class of cross-section determined in computation of cross-section:

Class = $Class_{out.el.}$

Class = *1* = *1* Table 5.2

where

$Class_{out.el.}$ = *1* Table 5.2

$Class_{out.el.}$ - the highest class of outstand elements:

If criterion ($\sigma_1 \leq 0$ AND $\sigma_2 \leq 0$) is satisfied , then

that is *criterion (-189.534 ≤ 0 AND -190.783 ≤ 0) is satisfied* , then

$Class_{out.el.}$ = *1* Table 5.2

where

σ_1 = *-189.534* MPa - design normal stress (compressive stress is positive)
σ_2 = *-190.783* MPa - design normal stress (compressive stress is positive)

Design combination of loads No. 75, combination No. 3, fundamental combination (type I) :

N_{Ed}, kN	$M_{y,Ed}$, kN·m	$V_{z,Ed}$, kN	$M_{z,Ed}$, kN·m	$V_{y,Ed}$, kN	$M_{x,Ed}$, kN·m	$B_{w,Ed}$, kN·m^2	$T_{w,Ed}$, kN·m
-5.827	0	0	-28.36	20.96	0	0	0

$UF_{bending}$ - utilization percentage for load-bearing capacity of structural element in bending:

$$UF_{bending} = |(-1 \cdot UF_{bending.y} + 0 \cdot UF_{bending.z} + UF_w)| \cdot 100$$

$$UF_{bending} = |(-1 \cdot 0.515927 + 0 \cdot 0 + 0)| \cdot 100 = 51.5927 \ \%$$

where

$UF_{bending.y} = 0.515927$ %/100% - utilization fraction for load-bearing capacity of the structural element in bending
$UF_{bending.z} = 0$ %/100% - utilization fraction for load-bearing capacity of the structural element in bending
$UF_w = 0$ - component takes into account the reduction in load-bearing capacity of the section in case of warping

$UF_{bending.y}$ - utilization fraction for load-bearing capacity of the structural element in bending:

$$UF_{bending.y} = |M_{y.Ed}| / (W_{pl.y} \cdot fy \cdot 10^{-3} / \gamma_{M0}) + \rho_z$$

$$UF_{bending.y} = |-28.3635| / (169.156 \cdot 325 \cdot 10^{-3} / 1) + 0 = 0.515927 \ \%/100\%$$

where

$M_{y.Ed} = -28.3635$ kNm - design bending moment
$W_{pl.y} = 169.156$ cm^3 - plastic section modulus
$fy = 325$ MPa - yield strength
$\gamma_{M0} = 1$ - partial safety factor in determining load-bearing capacity of cross-sections by strength regardless of class
$\rho_z = 0$ - reduction factor to determine reduced design value of the resistance to bending moment making allowance of the presence of shear force

$UF_{bending.z}$ - utilization fraction for load-bearing capacity of the structural element in bending:

$$UF_{bending.z} = |M_{z.Ed}| / (W_{pl.z} \cdot fy \cdot 10^{-3} / \gamma_{M0}) + \rho_y$$

$$UF_{bending.z} = |0| / (127.85 \cdot 325 \cdot 10^{-3} / 1) + 0 = 0 \ \%/100\%$$

where

$M_{z.Ed} = 0$ kNm - design bending moment
$W_{pl.z} = 127.85$ cm^3 - plastic section modulus
$fy = 325$ MPa - yield strength
$\gamma_{M0} = 1$ - partial safety factor in determining load-bearing capacity of cross-sections by strength regardless of class
$\rho_y = 0$ - reduction factor to determine reduced design value of the resistance to bending moment making allowance of the presence of shear force

$M_{z.Ed}$ - design bending moment:

$$M_{z.Ed} = -M_{y.Ed}$$

$$M_{z.Ed} = -0 = 0 \ \text{kNm}$$

where

$M_{y.Ed} = 0$ kNm - design bending moment

UF_w - component takes into account the reduction in load-bearing capacity of the section in case of warping:

$$UF_w = \sigma_w / (fy \cdot \gamma_{M0})$$

$$UF_w = 0 / (325 \cdot 1) = 0$$

where

σ_w = *0* MPa - normal stress at point from warping
fy = *325* MPa - yield strength
γ_{M0} = *1* - partial safety factor in determining load-bearing capacity of cross-sections by strength regardless of class

σ_w - normal stress at point from warping:

$$\sigma_w = B_{w.Ed} \cdot w_i / I_w \cdot 10^5$$

$$\sigma_w = 0 \cdot 6.97863 / 629.682 \cdot 10^5 = 0 \text{ MPa}$$

where

$B_{w.Ed}$ = *0* kNm^2 - design balue for bimoment
w_i = *6.97863* cm^2 - warping coordinate for the point (sign "-" for compressive stress)
I_w = *629.682* cm^6 - warping constant

Design combination of loads No. 73, combination No. 1, fundamental combination (type I) :

N_{Ed}, kN	$M_{y,Ed}$, kN·m	$V_{z,Ed}$, kN	$M_{z,Ed}$, kN·m	$V_{y,Ed}$, kN	$M_{x,Ed}$, kN·m	$B_{w,Ed}$, kN·m^2	$T_{w,Ed}$, kN·m
-5.335	0.1115	0.07859	-28.61	21.02	-0.003682	0	0

UF_{shear} - utilization percentage for load-bearing capacity of structural element in shear:

If criterion (Class = 3 OR Class = 4) is not satisfied , then

$$UF_{shear} = UF_{shear.z}$$

that is *criterion (1 = 3 OR 1 = 4) is not satisfied , then*

$$UF_{shear} = 5.43115 \%$$

where

$UF_{shear.z}$ = *5.43115* % - utilization percentage for load-bearing capacity of structural element in shear
Class = *1* Table 5.2 - class of cross-section

Class - class of cross-section:

$$Class = Class_{out.el.}$$

$$Class = 1 = 1 \text{ Table } 5.2$$

where

$Class_{out.el.}$ = *1* Table 5.2

$UF_{shear.z}$ - utilization percentage for load-bearing capacity of structural element in shear:

$$UF_{shear.z} = |V_{z.Ed}| / V_{pl.z.Rd} \cdot 100$$

$$UF_{shear.z} = |-21.0233| / 387.088 \cdot 100 = 5.43115 \%$$

where

$V_{z.Ed}$ = *-21.0233* kN - design shear force
$V_{pl.z.Rd}$ = *387.088* kN - design load-bearing capacity of the cross-section in shear for plastic analysis

$V_{z.Ed}$ - design shear force:

$V_{z.Ed} = -V_{y.Ed}$

$V_{z.Ed} = -21.0233 = -21.0233$ kN

where

$V_{y.Ed} = 21.0233$ kN - design shear force

$V_{pl.z.Rd}$ - design load-bearing capacity of the cross-section in shear for plastic analysis:

$V_{pl.z.Rd} = V_{pl.T.z.Rd}$

$V_{pl.z.Rd} = 387.088$ kN

where

$V_{pl.T.z.Rd} = 387.088$ kN - reduced design load-bending capacity of cross-section in shear for the plastic analysis with account of torsion

$V_{pl.T.z.Rd}$ - reduced design load-bending capacity of cross-section in shear for the plastic analysis with account of torsion:

$V_{pl.T.z.Rd} = V_{pl.z.Rd} \cdot (1 - \tau_{t.Ed} / (fy / 3^{½} / \gamma_{M0}))^{½}$

$V_{pl.T.z.Rd} = 387.106 \cdot (1 - 0.0176164 / (325 / 3^{½} / 1))^{½} = 387.088$ kN

where

$V_{pl.z.Rd} = 387.106$ kN - design load-bearing capacity of the cross-section in shear for plastic analysis
$\tau_{t.Ed} = 0.0176164$ MPa - design shear stress caused by torsional moment
$fy = 325$ MPa - yield strength
$\gamma_{M0} = 1$ - partial safety factor in determining load-bearing capacity of cross-sections by strength regardless of class

$V_{pl.z.Rd}$ - design load-bearing capacity of the cross-section in shear for plastic analysis:

$V_{pl.z.Rd} = A_{v.z} \cdot fy \cdot 10^{-1} / (3^{½} \cdot \gamma_{M0})$

$V_{pl.z.Rd} = 20.6304 \cdot 325 \cdot 10^{-1} / (3^{½} \cdot 1) = 387.106$ kN

where

$A_{v.z} = 20.6304$ cm^2 - shear area of the cross-section along the local axis Z1*
$fy = 325$ MPa - yield strength
$\gamma_{M0} = 1$ - partial safety factor in determining load-bearing capacity of cross-sections by strength regardless of class

$\tau_{t.Ed}$ - design shear stress caused by torsional moment:

$\tau_{t.Ed} = |\tau_{t.Ed}|$

$\tau_{t.Ed} = |0.0176164| = 0.0176164$ MPa

where

$\tau_{t.Ed} = 0.0176164$ MPa - design shear stress caused by torsional moment

$\tau_{t.Ed}$ - design shear stress caused by torsional moment:

$\tau_{t.Ed} = |M_{x.Ed}| \cdot 10^3 / W_f$

$\tau_{t.Ed} = |-0.00368224| \cdot 10^3 / 209.024 = 0.0176164$ MPa

where

$M_{x,Ed}$ = *-0.00368224* kNm - design torsion moment
W_f = *209.024* cm^3 - torsional section modulus for flange

Design combination of loads No. 77, combination No. 5, fundamental combination (type I) :

N_{Ed}, kN	$M_{y,Ed}$, kN·m	$V_{z,Ed}$, kN	$M_{z,Ed}$, kN·m	$V_{y,Ed}$, kN	$M_{x,Ed}$, kN·m	$B_{w,Ed}$, kN·m^2	$T_{w,Ed}$, kN·m
-3.834	0.1859	0.131	-20.84	14.92	-0.006137	0	0

$UF_{torsion}$ - utilization percentage for load-bearing capacity of structural element in torsion:

$UF_{torsion} = (\tau_{t,Ed} + \tau_{w,Ed}) / (fy/3^{1/2}/\gamma_{M0}) \cdot 100$

$UF_{torsion} = (0.0293604 + 0) / (325/3^{1/2}/1) \cdot 100 = 0.0156473$ %

where

$\tau_{t,Ed}$ = *0.0293604* MPa - design shear stress caused by torsional moment
$\tau_{w,Ed}$ = *0* MPa - design shear stress in warping torsion
fy = *325* MPa - yield strength
γ_{M0} = *1* - partial safety factor in determining load-bearing capacity of cross-sections by strength regardless of class

$\tau_{t,Ed}$ - design shear stress caused by torsional moment:

$\tau_{t,Ed} = |\tau_{t,Ed}|$

$\tau_{t,Ed} = |0.0293604| = 0.0293604$ MPa

where

$\tau_{t,Ed}$ = *0.0293604* MPa - design shear stress caused by torsional moment

$\tau_{t,Ed}$ - design shear stress caused by torsional moment:

$\tau_{t,Ed} = |M_{x,Ed}| \cdot 10^3 / W_f$

$\tau_{t,Ed} = |-0.00613703| \cdot 10^3 / 209.024 = 0.0293604$ MPa

where

$M_{x,Ed}$ = *-0.00613703* kNm - design torsion moment
W_f = *209.024* cm^3 - torsional section modulus for flange

$\tau_{w,Ed}$ - design shear stress in warping torsion:

$\tau_{w,Ed} = |\tau_{w,Ed}|$

$\tau_{w,Ed} = |0| = 0$ MPa

where

$\tau_{w,Ed}$ = *0* MPa - design shear stress in warping torsion

Design combination of loads No. 73, combination No. 1, fundamental combination (type I) :

N_{Ed}, kN	$M_{y,Ed}$, kN·m	$V_{z,Ed}$, kN	$M_{z,Ed}$, kN·m	$V_{y,Ed}$, kN	$M_{x,Ed}$, kN·m	$B_{w,Ed}$, kN·m^2	$T_{w,Ed}$, kN·m
-5.335	0.1115	0.07859	-28.61	21.02	-0.003682	0	0

$UF_{buckling}$ - utilization percentage for load-bearing capacity of structural element by overall stability:

$UF_{buckling} = UF_{buckl.about\ Z1}$

$UF_{buckling} = 38.9225\ \%$

where

$UF_{buckl.about\ Z1} = 38.9225\ \%$ - utilization percentage for load-bearing capacity of structural element for buckling relative to local axis Z1

$UF_{buckl.about\ Z1}$ - utilization percentage for load-bearing capacity of structural element for buckling relative to local axis Z1:

$UF_{buckl.about\ Z1} = UF_{buckl.about\ Y1}$

$UF_{buckl.about\ Z1} = 38.9225\ \%$

where

$UF_{buckl.about\ Y1} = 38.9225\ \%$ - utilization percentage for load-bearing capacity of structural element for buckling relative to local axis Y1*

$UF_{buckl.about\ Y1}$ - utilization percentage for load-bearing capacity of structural element for buckling relative to local axis Y1*:

If criterion ($I_y \geq I_z$) is satisfied and
criterion ($\overline{\lambda}_{LT} > \overline{\lambda}_{LT.0}$ AND $|M_{y.Ed}|/M_{y.cr} > \overline{\lambda}_{LT.0}^2$) is not satisfied , then

$$UF_{buckl.about\ Y1} = ((-k_{yy}) \cdot M_{y.Ed}/M_{b.Rd} - k_{yz} \cdot M_{z.Ed}/M_{b.Rd} - UF_w) \cdot 100$$

that is *criterion ($1008.13 \geq 535.651$) is satisfied and*
criterion ($0.0974723 > 0.4$ AND $|-28.6125|/5786.41 > 0.4^2$) is not satisfied , then

$$UF_{buckl.about\ Y1} = ((-0.745576) \cdot -28.6125/54.9758 - 0.441425 \cdot -0.111526/41.5513 - 0) \cdot 100 = 38.9225\ \%$$

where

$k_{yy} = 0.745576$ - interaction factors
$M_{y.Ed} = -28.6125$ kNm - design bending moment
$M_{b.Rd} = 54.9758$ kNm - design load-bearing capacity of the element in lateral torsional buckling
$k_{yz} = 0.441425$ - interaction factors
$M_{z.Ed} = -0.111526$ kNm - design bending moment
$M_{b.Rd} = 41.5513$ kNm - design load-bearing capacity of the element in lateral torsional buckling
$UF_w = 0$ - component takes into account the reduction in load-bearing capacity of the section in case of warping
$I_y = 1008.13\ cm^4$ - second moment of area about y-y axis
$I_z = 535.651\ cm^4$ - second moment of area about z-z axis
$\overline{\lambda}_{LT} = 0.0974723$ - non-dimensional slenderness for lateral-torsional buckling in elastic stage
$\overline{\lambda}_{LT.0} = 0.4$ - rectilinear fragment of lateral torsional buckling curve for rolled sections
$M_{y.cr} = 5786.41$ kNm - elastic critical moment for lateral-torsional buckling

$\overline{\lambda}_{LT}$ - non-dimensional slenderness for lateral-torsional buckling in elastic stage:

$$\overline{\lambda}_{LT} = (W_y \cdot fy \cdot 10^{-3}/M_{y.cr})^{1/2}$$

$$\overline{\lambda}_{LT} = (169.156 \cdot 325 \cdot 10^{-3}/5786.41)^{1/2} = 0.0974723$$

where

$W_y = 169.156\ cm^3$ - section modulus
$fy = 325$ MPa - yield strength
$M_{y.cr} = 5786.41$ kNm - elastic critical moment for lateral-torsional buckling

W_y - section modulus:

If criterion (Class = 1 OR Class = 2) is satisfied , then

$$W_y = W_{pl.y}$$

that is *criterion (1 = 1 OR 1 = 2) is satisfied , then*

$$W_y = 169.156 \text{ cm}^3$$

where

$W_{pl.y} = 169.156$ cm^3 - plastic section modulus
Class = *1* Table 5.2 - class of cross-section

$M_{y.cr}$ - elastic critical moment for lateral-torsional buckling:

$$M_{y.cr} = C_1 \cdot \Pi^2 \cdot E \cdot I_z \cdot 10^{-8} / L_z^2 \cdot ((k_z^2/kw^2 \cdot I_w \cdot 10^{-12} / (I_z \cdot 10^{-8}) + L_z^2 \cdot G \cdot I_t \cdot 10^{-8} / (3.14159^2 \cdot E \cdot I_z \cdot 10^{-8}) + (C_2 \cdot z_g \cdot 10^{-2} - C_3 \cdot z_j \cdot 10^{-2}) \cdot (C_2 \cdot z_g \cdot 10^{-2} - C_3 \cdot z_j \cdot 10^{-2}))^{1/2} - (C_2 \cdot z_g \cdot 10^{-2} - C_3 \cdot z_j \cdot 10^{-2})) \cdot 10^3$$

$$M_{y.cr} = 2.57 \cdot 3.14159^2 \cdot 210000 \cdot 535.651 \cdot 10^{-8} / 1^2 \cdot ((1^2/1^2 \cdot 629.682 \cdot 10^{-12} / (535.651 \cdot 10^{-8}) + 1^2 \cdot 81000 \cdot 1208.38 \cdot 10^{-8} / (3.14159^2 \cdot 210000 \cdot 535.651 \cdot 10^{-8}) + (1.55 \cdot 7.5 \cdot 10^{-2} - 0.75 \cdot 0 \cdot 10^{-2}) \cdot (1.55 \cdot 7.5 \cdot 10^{-2} - 0.75 \cdot 0 \cdot 10^{-2}))^{1/2} - (1.55 \cdot 7.5 \cdot 10^{-2} - 0.75 \cdot 0 \cdot 10^{-2})) \cdot 10^3 = 5786.41 \text{ kNm}$$

where

$C_1 = 2.57$ - factor
$\Pi = 3.14159$ - mathematical constant
$E = 210000$ MPa - modulus of elasticity
$I_z = 535.651$ cm^4 - second moment of area about z-z axis
$L_z = 1$ m - buckling length
$k_z = 1$ - factor for considering type of restraints at the end of the element from rotation about axis Z1-Z1*
$kw = 1$ - effective length factor for warping
$I_w = 629.682$ cm^6 - warping constant
$G = 81000$ MPa - shear modulus
$I_t = 1208.38$ cm^4 - torsional constant
$C_2 = 1.55$ - factor
$z_g = 7.5$ cm - coordinate of the point where external load is applied to relative to the shear (flexural) centre of the section
$C_3 = 0.75$ - factor
$z_j = 0$ cm - monosymmetry parameter

E - modulus of elasticity:

$$E = 2.1 \cdot 10^5$$

$$E = 2.1 \cdot 10^5 = 210000 \text{ MPa}$$

G - shear modulus:

$$G = 0.81 \cdot 10^5$$

$$G = 0.81 \cdot 10^5 = 81000 \text{ MPa}$$

z_g - coordinate of the point where external load is applied to relative to the shear (flexural) centre of the section:

$$z_g = z_a - z_s$$

$$z_g = 7.5 - 0 = 7.5 \text{ cm}$$

where

$z_a = 7.5$ cm - coordinate of the point where external load is applied to relative to the gravity centre of the section

z_s = *0* cm - coordinate of the shear (flexural) centre of the section relative to the gravity centre of the section

z_a - coordinate of the point where external load is applied to relative to the gravity centre of the section:

$z_a = Z_u$

z_a = *7.5* cm

where

Z_u = *7.5* cm - distance from the neutral axis to the farthest point in the positive direction of axis Z1*

z_s - coordinate of the shear (flexural) centre of the section relative to the gravity centre of the section:

$z_s = Z_s$

z_s = *0* cm

where

Z_s = *0* cm - coordinate of the shear (flexural) centre relative to the gravity centre

k_{yy} - interaction factors:

If criterion (Class = 3 OR Class = 4) is not satisfied , then

$k_{yy} = C_{my} \cdot (1 + (\overline{\lambda}_y - 0.2) \cdot |N_{Ed}| / (\chi_y \cdot N_{Rk} / \gamma_{M1}))$

that is *criterion (1 = 3 OR 1 = 4) is not satisfied , then*

k_{yy} = *0.745576·(1 + (0.117065 - 0.2)·|0|/(1·1145.38/1)) = 0.745576*

where

C_{my} = *0.745576* - factor
$\overline{\lambda}_y$ = *0.117065* - non-dimensional slenderness of the member for buckling
N_{Ed} = *0* kN - design axial force
χ_y = *1* - reduction factor for the buckling mode corresponding to the buckling curve, about Y1-Y1*
N_{Rk} = *1145.38* kN - characteristic value for load-bearing capacity in compression
γ_{M1} = *1* - partial safety factor in determining load-bearing capacity of element in buckling
Class = *1* Table 5.2 - class of cross-section

Class - class of cross-section:

Class = $Class_{out.el.}$

Class = *1* = *1* Table 5.2

where

$Class_{out.el.}$ = *1* Table 5.2

C_{my} - factor:

$C_{my} = 0.2 + 0.8 \cdot \alpha_s$

C_{my} = *0.2 + 0.8·0.681971 = 0.745576*

where

α_s = *0.681971* - factor

$\bar{\lambda}_y$ - non-dimensional slenderness of the member for buckling:

$$\bar{\lambda}_y = (fy \cdot A \cdot 10^{-1}/N_{cr})^{1/2}$$

$$\bar{\lambda}_y = (325 \cdot 35.2425 \cdot 10^{-1}/83578.4)^{1/2} = 0.117065$$

where

$fy = 325$ MPa - yield strength
$A = 35.2425$ cm^2 - area of gross cross-section
$N_{cr} = 83578.4$ kN - elastic critical force for the relevant buckling mode

N_{cr} - elastic critical force for the relevant buckling mode:

$$N_{cr} = \Pi^2 \cdot E \cdot I_y / L_y^2 \cdot 10^{-5}$$

$$N_{cr} = 3.14159^2 \cdot 210000 \cdot 1008.13 / 0.5^2 \cdot 10^{-5} = 83578.4 \text{ kN}$$

where

$\Pi = 3.14159$ - mathematical constant
$E = 210000$ MPa - modulus of elasticity
$I_y = 1008.13$ cm^4 - second moment of area about y-y axis
$L_y = 0.5$ m - buckling length

N_{Rk} - characteristic value for load-bearing capacity in compression:

$$N_{Rk} = fy \cdot A \cdot 10^{-1}$$

$$N_{Rk} = 325 \cdot 35.2425 \cdot 10^{-1} = 1145.38 \text{ kN}$$

where

$fy = 325$ MPa - yield strength
$A = 35.2425$ cm^2 - area of gross cross-section

$M_{b.Rd}$ - design load-bearing capacity of the element in lateral torsional buckling:

If criterion ($I_y \geq I_z$) is satisfied and
criterion ($\bar{\lambda}_{LT} > \bar{\lambda}_{LT.0}$ AND $|M_{y.Ed}|/M_{y.cr} > \bar{\lambda}_{LT.0}^2$) is not satisfied , then

$$M_{b.Rd} = W_y \cdot 10^{-3} \cdot fy / \gamma_{M1}$$

that is *criterion (1008.13 ≥ 535.651) is satisfied and*
criterion (0.0974723 > 0.4 AND |-28.6125|/5786.41 > 0.4^2) is not satisfied , then

$$M_{b.Rd} = 169.156 \cdot 10^{-3} \cdot 325/1 = 54.9758 \text{ kNm}$$

where

$W_y = 169.156$ cm^3 - section modulus
$fy = 325$ MPa - yield strength
$\gamma_{M1} = 1$ - partial safety factor in determining load-bearing capacity of element in buckling
$I_y = 1008.13$ cm^4 - second moment of area about y-y axis
$I_z = 535.651$ cm^4 - second moment of area about z-z axis
$\bar{\lambda}_{LT} = 0.0974723$ - non-dimensional slenderness for lateral-torsional buckling in elastic stage
$\bar{\lambda}_{LT.0} = 0.4$ - rectilinear fragment of lateral torsional buckling curve for rolled sections
$M_{y.Ed} = -28.6125$ kNm - design bending moment
$M_{y.cr} = 5786.41$ kNm - elastic critical moment for lateral-torsional buckling

k_{yz} - interaction factors:

If criterion (Class = 3 OR Class = 4) is not satisfied , then

$$k_{yz} = 0.6 \cdot k_{zz}$$

that is *criterion (1 = 3 OR 1 = 4) is not satisfied , then*

$$k_{yz} = 0.6 \cdot 0.735708 = 0.441425$$

where

k_{zz} = *0.735708* - interaction factors
Class = *1* Table 5.2 - class of cross-section

k_{zz} - interaction factors:

$$k_{zz} = C_{mz} \cdot (1 + (\overline{\lambda}_z - 0.2) \cdot |N_{Ed}| / (\chi_z \cdot N_{Rk} / \gamma_{M1}))$$

$$k_{zz} = 0.735708 \cdot (1 + (0.321199 - 0.2) \cdot |0| / (0.972488 \cdot 1145.38 / 1)) = 0.735708$$

where

C_{mz} = *0.735708* - factor
$\overline{\lambda}_z$ = *0.321199* - non-dimensional slenderness of the member for buckling
N_{Ed} = *0* kN - design axial force
χ_z = *0.972488* - reduction factor for the buckling mode corresponding to the buckling curve, about Z1-Z1*
N_{Rk} = *1145.38* kN - characteristic value for load-bearing capacity in compression
γ_{M1} = *1* - partial safety factor in determining load-bearing capacity of element in buckling

C_{mz} - factor:

$$C_{mz} = 0.2 + 0.8 \cdot \alpha_s$$

$$C_{mz} = 0.2 + 0.8 \cdot 0.669635 = 0.735708$$

where

α_s = *0.669635* - factor

$\overline{\lambda}_z$ - non-dimensional slenderness of the member for buckling:

$$\overline{\lambda}_z = (fy \cdot A \cdot 10^{-1} / N_{cr})^{1/2}$$

$$\overline{\lambda}_z = (325 \cdot 35.2425 \cdot 10^{-1} / 11102)^{1/2} = 0.321199$$

where

fy = *325* MPa - yield strength
A = *35.2425* cm^2 - area of gross cross-section
N_{cr} = *11102* kN - elastic critical force for the relevant buckling mode

N_{cr} - elastic critical force for the relevant buckling mode:

$$N_{cr} = \Pi^2 \cdot E \cdot I_z / L_z^2 \cdot 10^{-5}$$

$$N_{cr} = 3.14159^2 \cdot 210000 \cdot 535.651 / 1^2 \cdot 10^{-5} = 11102 \text{ kN}$$

where

Π = *3.14159* - mathematical constant
E = *210000* MPa - modulus of elasticity
I_z = *535.651* cm^4 - second moment of area about z-z axis
L_z = *1* m - buckling length

χ_z - reduction factor for the buckling mode corresponding to the buckling curve, about Z1-Z1*:

$$\chi_z = 1/(\Phi + (\Phi^2 - \overline{\lambda}_z^2)^{1/2})$$

$$\chi_z = 1/(0.56431 + (0.56431^2 - 0.321199^2)^{1/2}) = 0.972488$$

where

$\Phi = 0.56431$ - value to determine the reduction factor χ
$\overline{\lambda}_z = 0.321199$ - non-dimensional slenderness of the member for buckling

Φ - value to determine the reduction factor χ:

$$\Phi = 0.5 \cdot (1 + \alpha \cdot (\overline{\lambda}_z - 0.2) + \overline{\lambda}_z^2)$$

$$\Phi = 0.5 \cdot (1 + 0.21 \cdot (0.321199 - 0.2) + 0.321199^2) = 0.56431$$

where

$\alpha = 0.21$ - imperfection factor
$\overline{\lambda}_z = 0.321199$ - non-dimensional slenderness of the member for buckling

$M_{z.Ed}$ - design bending moment:

$$M_{z.Ed} = -M_{y.Ed}$$

$$M_{z.Ed} = -0.111526 = -0.111526 \text{ kNm}$$

where

$M_{y.Ed} = 0.111526$ kNm - design bending moment

$M_{b.Rd}$ - design load-bearing capacity of the element in lateral torsional buckling:

If criterion ($I_y \geq I_z$) is satisfied and
criterion ($\overline{\lambda}_{LT} > \overline{\lambda}_{LT.0}$ AND $|M_{y.Ed}|/M_{y.cr} > \overline{\lambda}_{LT.0}^2$) is not satisfied , then

$$M_{b.Rd} = W_z \cdot 10^{-3} \cdot fy/\gamma_{M1}$$

that is *criterion (1008.13 ≥ 535.651) is satisfied and*
criterion (0.0974723 > 0.4 AND |-28.6125|/5786.41 > 0.4^2) is not satisfied , then

$$M_{b.Rd} = 127.85 \cdot 10^{-3} \cdot 325/1 = 41.5513 \text{ kNm}$$

where

$W_z = 127.85$ cm^3 - section modulus
$fy = 325$ MPa - yield strength
$\gamma_{M1} = 1$ - partial safety factor in determining load-bearing capacity of element in buckling
$I_y = 1008.13$ cm^4 - second moment of area about y-y axis
$I_z = 535.651$ cm^4 - second moment of area about z-z axis
$\overline{\lambda}_{LT} = 0.0974723$ - non-dimensional slenderness for lateral-torsional buckling in elastic stage
$\overline{\lambda}_{LT.0} = 0.4$ - rectilinear fragment of lateral torsional buckling curve for rolled sections
$M_{y.Ed} = -28.6125$ kNm - design bending moment
$M_{y.cr} = 5786.41$ kNm - elastic critical moment for lateral-torsional buckling

W_z - section modulus:

If criterion (Class = 1 OR Class = 2) is satisfied , then

$$W_z = W_{pl.z}$$

that is *criterion (1 = 1 OR 1 = 2) is satisfied , then*

$$W_z = 127.85 \text{ cm}^3$$

where

$W_{pl.z}$ = *127.85* cm^3 - plastic section modulus
Class = *1* Table 5.2 - class of cross-section

UF_w - component takes into account the reduction in load-bearing capacity of the section in case of warping:

$UF_w = \sigma_w/(fy \cdot \gamma_{M0})$

$UF_w = 0/(325 \cdot 1) = 0$

where

σ_w = *0* MPa - normal stress at point from warping
fy = *325* MPa - yield strength
γ_{M0} = *1* - partial safety factor in determining load-bearing capacity of cross-sections by strength regardless of class

σ_w - normal stress at point from warping:

$\sigma_w = B_{w.Ed} \cdot w_i/I_w \cdot 10^5$

$\sigma_w = 0 \cdot -6.97863/629.682 \cdot 10^5 = 0$ MPa

where

$B_{w.Ed}$ = *0* kNm^2 - design balue for bimoment
w_i = *-6.97863* cm^2 - warping coordinate for the point (sign "-" for compressive stress)
I_w = *629.682* cm^6 - warping constant

Design combination of loads No. 87 :

N_{Ed}, kN	$M_{y,Ed}$, kN·m	$V_{z,Ed}$, kN	$M_{z,Ed}$, kN·m	$V_{y,Ed}$, kN	$M_{x,Ed}$, kN·m	$B_{w,Ed}$, kN·m^2	$T_{w,Ed}$, kN·m
0	0	0	0	0	0	0	0

$UF_{deflection}$ - utilization percentage for load-bearing capacity of structural element by deflection:

$UF_{deflection} = |\delta_y|/(L \cdot 10^3 \cdot 1/\delta_{lim}) \cdot 100$

$UF_{deflection} = |(1.63247 \cdot 10^{-6})|/(2.81299 \cdot 10^3 \cdot 0.004) \cdot 100 = (1.45084 \cdot 10^{-5})$ %

where

δ_y = *(1.63247·10^-6)* mm - max deflection
L = *2.81299* m - length
$1/\delta_{lim}$ = *0.004* - ultimate relative deflection

$1/\delta_{lim}$ - ultimate relative deflection:

$1/\delta_{lim} = 1/250$

$1/\delta_{lim} = 1/250 = 0.004$

Design combination of loads No. 84, combination No. 12, fundamental combination (type I) :

N_{Ed}, kN	$M_{y,Ed}$, kN·m	$V_{z,Ed}$, kN	$M_{z,Ed}$, kN·m	$V_{y,Ed}$, kN	$M_{x,Ed}$, kN·m	$B_{w,Ed}$, kN·m^2	$T_{w,Ed}$, kN·m
-7.39	0	0	-20.17	14.6	0	0	0

$UF_{l.b.web}$ - utilization percentage for load-bearing capacity of structural element in local buckling of web:

$UF_{l.b.web} = UF_{l.b.}$

$UF_{l.b.web} = 20.3362\ \%$

where

$UF_{l.b.} = 20.3362\ \%$ - local buckling

$UF_{l.b.}$ - local buckling:

If criterion ($\Psi > -1$) is satisfied , then

$UF_{l.b.} = d/t_w/(42 \cdot \varepsilon/(0.67 + 0.33 \cdot \Psi)) \cdot 100$

that is *criterion (0.993452 > -1) is satisfied , then*

$UF_{l.b.} = 9.5/(42 \cdot 1.10985/(0.67 + 0.33 \cdot 0.993452)) \cdot 100 = 20.3362\ \%$

where

$d/t_w = 9.5$ - width-to-thickness ratios
$\varepsilon = 1.10985$ - coefficient depending on $\sigma_{com.Ed}$
$\Psi = 0.993452$ Table 5.2 - ratio of stresses

Ψ - ratio of stresses:

$\Psi = \sigma_2/\sigma_1$

$\Psi = 189.534/190.783 = 0.993452$ Table 5.2

where

$\sigma_2 = 189.534$ MPa - design normal stress (compressive stress is positive)
$\sigma_1 = 190.783$ MPa - design normal stress (compressive stress is positive)

d/t_w - width-to-thickness ratios:

$d/t_w = (b - 3 \cdot t)/t$

$d/t_w = (10 - 3 \cdot 0.8)/0.8 = 9.5$

where

$b = 10$ cm - short leg of angle
$t = 0.8$ cm - plate thickness

b - short leg of angle:

$b = B_f$

$b = 10$ cm

where

$B_f = 10$ cm - flange width

t - plate thickness:

$t = T_f$

$t = 0.8$ cm

where

$T_f = 0.8$ cm - flange thickness

ε - coefficient depending on $\sigma_{com.Ed}$:

$\varepsilon = (235/\sigma_{com.Ed})^{½}$

$\varepsilon = (235/190.783)^{½} = 1.10985$

where

$\sigma_{com.Ed} = 190.783$ MPa - max design compressive stress in element

Design combination of loads No. 84, combination No. 12, fundamental combination (type I) :

N_{Ed}, kN	$M_{y,Ed}$, kN·m	$V_{z,Ed}$, kN	$M_{z,Ed}$, kN·m	$V_{y,Ed}$, kN	$M_{x,Ed}$, kN·m	$B_{w,Ed}$, kN·m^2	$T_{w,Ed}$, kN·m
-7.39	0	0	-20.17	14.6	0	0	0

$UF_{l.b.flange}$ - utilization percentage for load-bearing capacity of structural element in local buckling of flange:

$UF_{l.b.flange} = UF_{l.b.}$

$UF_{l.b.flange} = 20.3362$ %

where

$UF_{l.b.} = 20.3362$ % - local buckling

Design combination of loads No. 75, combination No. 3, fundamental combination (type I) :

N_{Ed}, kN	$M_{y,Ed}$, kN·m	$V_{z,Ed}$, kN	$M_{z,Ed}$, kN·m	$V_{y,Ed}$, kN	$M_{x,Ed}$, kN·m	$B_{w,Ed}$, kN·m^2	$T_{w,Ed}$, kN·m
-5.827	0	0	-28.36	20.96	0	0	0

UF_{ULS} - utilization percentage for load-bearing capacity of structural element by ultimate limit state:

$UF_{ULS} = UF_{bending}$

$UF_{ULS} = 51.5927$ %

where

$UF_{bending} = 51.5927$ % - utilization percentage for load-bearing capacity of structural element in bending

Design combination of loads No. 87 :

N_{Ed}, kN	$M_{y,Ed}$, kN·m	$V_{z,Ed}$, kN	$M_{z,Ed}$, kN·m	$V_{y,Ed}$, kN	$M_{x,Ed}$, kN·m	$B_{w,Ed}$, kN·m^2	$T_{w,Ed}$, kN·m
0	0	0	0	0	0	0	0

UF_{SLS} - utilization percentage for load-bearing capacity of structural element by serviceability limit state:

$UF_{SLS} = UF_{deflection}$

$UF_{SLS} = (1.45084 \cdot 10^{-5})$ %

where

$UF_{deflection} = (1.45084 \cdot 10^{-5})$ % - utilization percentage for load-bearing capacity of structural element by deflection

Design combination of loads No. 84, combination No. 12, fundamental combination (type I) :

N_{Ed}, kN	$M_{y,Ed}$, kN·m	$V_{z,Ed}$, kN	$M_{z,Ed}$, kN·m	$V_{y,Ed}$, kN	$M_{x,Ed}$, kN·m	$B_{w,Ed}$, kN·m^2	$T_{w,Ed}$, kN·m
-7.39	0	0	-20.17	14.6	0	0	0

$UF_{L.B.}$ - utilization percentage for load-bearing capacity of structural element in local buckling:

$UF_{L.B.} = UF_{l.b.flange}$

$UF_{L.B.} = 20.3362\ \%$

where

$UF_{l.b.flange} = 20.3362\ \%$ - utilization percentage for load-bearing capacity of structural element in local buckling of flange

Design combination of loads No. 73, combination No. 1, fundamental combination (type I) :

N_{Ed}, kN	$M_{y,Ed}$, kN·m	$V_{z,Ed}$, kN	$M_{z,Ed}$, kN·m	$V_{y,Ed}$, kN	$M_{x,Ed}$, kN·m	$B_{w,Ed}$, kN·m^2	$T_{w,Ed}$, kN·m
-5.335	0.1115	0.07859	-28.61	21.02	-0.003682	0	0

$T_{cr} = 628^{o}C$ - critical temperature for element of steel structure :

Buckling resistance of a member in bending				
θ_{cr}, ^{o}C	$k_{y,\theta}$	$\gamma_{M,fi}$	$\gamma_{M,0}$	$\frac{M_{y,fi,Ed}}{M_{y,fi,\theta,Rd}} + \frac{M_{z,fi,Ed}}{M_{z,fi,\theta,Rd}} \le 1$
100	1	1	1	0.340378
200	1	1	1	0.340378
300	1	1	1	0.340378
400	1	1	1	0.340378
500	0.78	1	1	0.436383
600	0.47	1	1	0.724209
700	0.23	1	1	1.47991
800	0.11	1	1	3.09435
900	0.06	1	1	5.67297
1000	0.04	1	1	8.50946
1100	0.02	1	1	17.0189
Critical temperature due to bending, ° C				636.495

Buckling of a member in one-plane bending								
θ_{cr}, ^{o}C	$k_{y,\theta}$	$k_{E,\theta}$	$\gamma_{M,fi}$	$\gamma_{M,0}$	$\lambda_{LT,\theta}$	φ_{θ}	$X_{LT,fi}$	$\frac{M_{y,fi,Ed}}{M_{b,fi,\theta,Rd}} + \frac{M_{z,fi,Ed}}{M_{b,fi,\theta,Rd}} \le 1$
100	1	1	1	1	0.0974723	0.531688	0.948438	0.358825
200	1	0.9	1	1	0.102745	0.533673	0.94575	0.359842
300	1	0.8	1	1	0.108977	0.536055	0.942582	0.361048
400	1	0.7	1	1	0.116502	0.538983	0.93877	0.362509
500	0.78	0.6	1	1	0.111136	0.536889	0.941487	0.463418
600	0.47	0.31	1	1	0.120019	0.540371	0.936992	0.772755
700	0.23	0.13	1	1	0.12965	0.544235	0.932139	1.58731
800	0.11	0.09	1	1	0.10776	0.535587	0.9432	3.28011
900	0.06	0.0675	1	1	0.0918978	0.529619	0.951289	5.96255

1000	0.04	0.045	1	1	0.0918978	0.529619	0.951289	8.94382
1100	0.02	0.0225	1	1	0.0918978	0.529619	0.951289	17.8876
Critical temperature due to buckling, ° C								627.898

Critical temperature, ° C	627.898

Shear resistance				
θ_{cr}, °C	$k_{y,\theta}$	$\gamma_{M,0}$	$\gamma_{M,fi}$	$\frac{V_{fi,Ed}}{V_{fi,\theta,Rd}} \leq 1$
100	1	1	1	0.0355442
200	1	1	1	0.0355442
300	1	1	1	0.0355442
400	1	1	1	0.0355442
500	0.78	1	1	0.0455695
600	0.47	1	1	0.0756259
700	0.23	1	1	0.15454
800	0.11	1	1	0.323129
900	0.06	1	1	0.592403
1000	0.04	1	1	0.888605
1100	0.02	1	1	1.77721
Critical temperature, ° C				1012.54

The influence of Mx force on fire analysis is not considered.

Class - the highest class of cross-section determined in computation of cross-section:

Class = $Class_{out.el.}$

Class = *1* = *1* Table 5.2

where

$Class_{out.el.}$ = *1* Table 5.2

$Class_{out.el.}$ - the highest class of outstand elements:

If criterion ($\sigma_1 \leq 0$ AND $\sigma_2 \leq 0$) is satisfied , then

that is *criterion (-129.264 ≤ 0 AND -130.101 ≤ 0) is satisfied* , then

$Class_{out.el.}$ = *1* Table 5.2

where

σ_1 = *-129.264* MPa - design normal stress (compressive stress is positive)
σ_2 = *-130.101* MPa - design normal stress (compressive stress is positive)

Design combination of loads No. 63, combination No. 3, fundamental combination (type I) :

N_{Ed}, kN	$M_{y,Ed}$, kN·m	$V_{z,Ed}$, kN	$M_{z,Ed}$, kN·m	$V_{y,Ed}$, kN	$M_{x,Ed}$, kN·m	$B_{w,Ed}$, kN·m²	$T_{w,Ed}$, kN·m
-5.442	0	0	-19.29	16.97	0	0	0

$UF_{bending}$ - utilization percentage for load-bearing capacity of structural element in bending:

$UF_{bending} = |(-1 \cdot UF_{bending.y} + 0 \cdot UF_{bending.z} + UF_w)| \cdot 100$

$UF_{bending} = |(-1 \cdot 0.350948 + 0 \cdot 0 + 0)| \cdot 100 = 35.0948$ %

where

$UF_{bending.y} = 0.350948$ %/100% - utilization fraction for load-bearing capacity of the structural element in bending
$UF_{bending.z} = 0$ %/100% - utilization fraction for load-bearing capacity of the structural element in bending
$UF_{w} = 0$ - component takes into account the reduction in load-bearing capacity of the section in case of warping

$UF_{bending.y}$ - utilization fraction for load-bearing capacity of the structural element in bending:

$$UF_{bending.y} = |M_{y.Ed}| / (W_{pl.y} \cdot fy \cdot 10^{-3} / \gamma_{M0}) + \rho_z$$

$$UF_{bending.y} = |-19.2936| / (169.156 \cdot 325 \cdot 10^{-3} / 1) + 0 = 0.350948 \text{ \%/100\%}$$

where

$M_{y.Ed} = -19.2936$ kNm - design bending moment
$W_{pl.y} = 169.156$ cm^3 - plastic section modulus
$fy = 325$ MPa - yield strength
$\gamma_{M0} = 1$ - partial safety factor in determining load-bearing capacity of cross-sections by strength regardless of class
$\rho_z = 0$ - reduction factor to determine reduced design value of the resistance to bending moment making allowance of the presence of shear force

$UF_{bending.z}$ - utilization fraction for load-bearing capacity of the structural element in bending:

$$UF_{bending.z} = |M_{z.Ed}| / (W_{pl.z} \cdot fy \cdot 10^{-3} / \gamma_{M0}) + \rho_y$$

$$UF_{bending.z} = |0| / (127.85 \cdot 325 \cdot 10^{-3} / 1) + 0 = 0 \text{ \%/100\%}$$

where

$M_{z.Ed} = 0$ kNm - design bending moment
$W_{pl.z} = 127.85$ cm^3 - plastic section modulus
$fy = 325$ MPa - yield strength
$\gamma_{M0} = 1$ - partial safety factor in determining load-bearing capacity of cross-sections by strength regardless of class
$\rho_y = 0$ - reduction factor to determine reduced design value of the resistance to bending moment making allowance of the presence of shear force

$M_{z.Ed}$ - design bending moment:

$$M_{z.Ed} = -M_{y.Ed}$$

$$M_{z.Ed} = -0 = 0 \text{ kNm}$$

where

$M_{y.Ed} = 0$ kNm - design bending moment

UF_{w} - component takes into account the reduction in load-bearing capacity of the section in case of warping:

$$UF_{w} = \sigma_w / (fy \cdot \gamma_{M0})$$

$$UF_{w} = 0 / (325 \cdot 1) = 0$$

where

$\sigma_w = 0$ MPa - normal stress at point from warping
$fy = 325$ MPa - yield strength
$\gamma_{M0} = 1$ - partial safety factor in determining load-bearing capacity of cross-sections by strength regardless of class

σ_w - normal stress at point from warping:

$\sigma_w = B_{w.Ed} \cdot w_i / I_w \cdot 10^5$

$\sigma_w = 0 \cdot 6.97863 / 629.682 \cdot 10^5 = 0$ MPa

where

$B_{w.Ed} = 0$ kNm^2 - design balue for bimoment
$w_i = 6.97863$ cm^2 - warping coordinate for the point (sign "-" for compressive stress)
$I_w = 629.682$ cm^6 - warping constant

Design combination of loads No. 61, combination No. 1, fundamental combination (type I) :

N_{Ed}, kN	$M_{y,Ed}$, kN·m	$V_{z,Ed}$, kN	$M_{z,Ed}$, kN·m	$V_{y,Ed}$, kN	$M_{x,Ed}$, kN·m	$B_{w,Ed}$, kN·m^2	$T_{w,Ed}$, kN·m
-4.95	0.07468	0.07859	-19.51	17.03	-0.003682	0	0

UF_{shear} - utilization percentage for load-bearing capacity of structural element in shear:

If criterion (Class = 3 OR Class = 4) is not satisfied , then

$UF_{shear} = UF_{shear.z}$

that is *criterion (1 = 3 OR 1 = 4) is not satisfied , then*

$UF_{shear} = 4.39969$ %

where

$UF_{shear.z} = 4.39969$ % - utilization percentage for load-bearing capacity of structural element in shear
Class = 1 Table 5.2 - class of cross-section

Class - class of cross-section:

$Class = Class_{out.el.}$

$Class = 1 = 1$ Table 5.2

where

$Class_{out.el.} = 1$ Table 5.2

$UF_{shear.z}$ - utilization percentage for load-bearing capacity of structural element in shear:

$UF_{shear.z} = |V_{z.Ed}| / V_{pl.z.Rd} \cdot 100$

$UF_{shear.z} = |-17.0307| / 387.088 \cdot 100 = 4.39969$ %

where

$V_{z.Ed} = -17.0307$ kN - design shear force
$V_{pl.z.Rd} = 387.088$ kN - design load-bearing capacity of the cross-section in shear for plastic analysis

$V_{z.Ed}$ - design shear force:

$V_{z.Ed} = -V_{y.Ed}$

$V_{z.Ed} = -17.0307 = -17.0307$ kN

where

$V_{y.Ed} = 17.0307$ kN - design shear force

$V_{pl.z.Rd}$ - design load-bearing capacity of the cross-section in shear for plastic analysis:

$$V_{pl.z.Rd} = V_{pl.T.z.Rd}$$

$$V_{pl.z.Rd} = 387.088 \text{ kN}$$

where

$V_{pl.T.z.Rd} = 387.088$ kN - reduced design load-bending capacity of cross-section in shear for the plastic analysis with account of torsion

$V_{pl.T.z.Rd}$ - reduced design load-bending capacity of cross-section in shear for the plastic analysis with account of torsion:

$$V_{pl.T.z.Rd} = V_{pl.z.Rd} \cdot (1 - \tau_{t.Ed} / (fy / 3^{1/2} / \gamma_{M0}))^{1/2}$$

$$V_{pl.T.z.Rd} = 387.106 \cdot (1 - 0.0176164 / (325 / 3^{1/2} / 1))^{1/2} = 387.088 \text{ kN}$$

where

$V_{pl.z.Rd} = 387.106$ kN - design load-bearing capacity of the cross-section in shear for plastic analysis
$\tau_{t.Ed} = 0.0176164$ MPa - design shear stress caused by torsional moment
$fy = 325$ MPa - yield strength
$\gamma_{M0} = 1$ - partial safety factor in determining load-bearing capacity of cross-sections by strength regardless of class

$V_{pl.z.Rd}$ - design load-bearing capacity of the cross-section in shear for plastic analysis:

$$V_{pl.z.Rd} = A_{v.z} \cdot fy \cdot 10^{-1} / (3^{1/2} \cdot \gamma_{M0})$$

$$V_{pl.z.Rd} = 20.6304 \cdot 325 \cdot 10^{-1} / (3^{1/2} \cdot 1) = 387.106 \text{ kN}$$

where

$A_{v.z} = 20.6304$ cm^2 - shear area of the cross-section along the local axis Z1*
$fy = 325$ MPa - yield strength
$\gamma_{M0} = 1$ - partial safety factor in determining load-bearing capacity of cross-sections by strength regardless of class

$\tau_{t.Ed}$ - design shear stress caused by torsional moment:

$$\tau_{t.Ed} = |\tau_{t.Ed}|$$

$$\tau_{t.Ed} = |0.0176164| = 0.0176164 \text{ MPa}$$

where

$\tau_{t.Ed} = 0.0176164$ MPa - design shear stress caused by torsional moment

$\tau_{t.Ed}$ - design shear stress caused by torsional moment:

$$\tau_{t.Ed} = |M_{x.Ed}| \cdot 10^3 / W_f$$

$$\tau_{t.Ed} = |-0.00368224| \cdot 10^3 / 209.024 = 0.0176164 \text{ MPa}$$

where

$M_{x.Ed} = -0.00368224$ kNm - design torsion moment
$W_f = 209.024$ cm^3 - torsional section modulus for flange

Design combination of loads No. 65, combination No. 5, fundamental combination (type I) :

N_{Ed}, kN	$M_{y,Ed}$, kN·m	$V_{z,Ed}$, kN	$M_{z,Ed}$, kN·m	$V_{y,Ed}$, kN	$M_{x,Ed}$, kN·m	$B_{w,Ed}$, kN·m^2	$T_{w,Ed}$, kN·m
-3.57	0.1245	0.131	-14.36	12.17	-0.006137	0	0

$UF_{torsion}$ - utilization percentage for load-bearing capacity of structural element in torsion:

$$UF_{torsion} = (\tau_{t.Ed} + \tau_{w.Ed}) / (fy/3^{1/2}/\gamma_{M0}) \cdot 100$$

$$UF_{torsion} = (0.0293604 + 0) / (325/3^{1/2}/1) \cdot 100 = 0.0156473 \ \%$$

where

$\tau_{t.Ed} = 0.0293604$ MPa - design shear stress caused by torsional moment
$\tau_{w.Ed} = 0$ MPa - design shear stress in warping torsion
$fy = 325$ MPa - yield strength
$\gamma_{M0} = 1$ - partial safety factor in determining load-bearing capacity of cross-sections by strength regardless of class

$\tau_{t.Ed}$ - design shear stress caused by torsional moment:

$$\tau_{t.Ed} = |\tau_{t.Ed}|$$

$$\tau_{t.Ed} = |0.0293604| = 0.0293604 \text{ MPa}$$

where

$\tau_{t.Ed} = 0.0293604$ MPa - design shear stress caused by torsional moment

$\tau_{t.Ed}$ - design shear stress caused by torsional moment:

$$\tau_{t.Ed} = |M_{x.Ed}| \cdot 10^3 / W_f$$

$$\tau_{t.Ed} = |-0.00613703| \cdot 10^3 / 209.024 = 0.0293604 \text{ MPa}$$

where

$M_{x.Ed} = -0.00613703$ kNm - design torsion moment
$W_f = 209.024$ cm^3 - torsional section modulus for flange

$\tau_{w.Ed}$ - design shear stress in warping torsion:

$$\tau_{w.Ed} = |\tau_{w.Ed}|$$

$$\tau_{w.Ed} = |0| = 0 \text{ MPa}$$

where

$\tau_{w.Ed} = 0$ MPa - design shear stress in warping torsion

Design combination of loads No. 61, combination No. 1, fundamental combination (type I) :

N_{Ed}, kN	$M_{y,Ed}$, kN·m	$V_{z,Ed}$, kN	$M_{z,Ed}$, kN·m	$V_{y,Ed}$, kN	$M_{x,Ed}$, kN·m	$B_{w,Ed}$, kN·m^2	$T_{w,Ed}$, kN·m
-4.95	0.07468	0.07859	-19.51	17.03	-0.003682	0	0

$UF_{buckling}$ - utilization percentage for load-bearing capacity of structural element by overall stability:

$$UF_{buckling} = UF_{buckl.about\ Z1}$$

$$UF_{buckling} = 26.5425 \ \%$$

where

$UF_{buckl.about\ Z1}$ = *26.5425* % - utilization percentage for load-bearing capacity of structural element for buckling relative to local axis Z1

$UF_{buckl.about\ Z1}$ - utilization percentage for load-bearing capacity of structural element for buckling relative to local axis Z1:

$$UF_{buckl.about\ Z1} = UF_{buckl.about\ Y1}$$

$$UF_{buckl.about\ Z1} = 26.5425\ \%$$

where

$UF_{buckl.about\ Y1}$ = *26.5425* % - utilization percentage for load-bearing capacity of structural element for buckling relative to local axis Y1*

$UF_{buckl.about\ Y1}$ - utilization percentage for load-bearing capacity of structural element for buckling relative to local axis Y1*:

If criterion ($I_y \geq I_z$) is satisfied and
criterion ($\overline{\lambda}_{LT} > \overline{\lambda}_{LT.0}$ AND $|M_{y.Ed}|/M_{y.cr} > \overline{\lambda}_{LT.0}^2$) is not satisfied , then

$$UF_{buckl.about\ Y1} = ((-k_{yy}) \cdot M_{y.Ed}/M_{b.Rd} - k_{yz} \cdot M_{z.Ed}/M_{b.Rd} - UF_w) \cdot 100$$

that is *criterion (1008.13 ≥ 535.651) is satisfied and*
criterion (0.0974723 > 0.4 AND |-19.5129|/5786.41 > 0.4^2) is not satisfied , then

$$UF_{buckl.about\ Y1} = ((-0.745576) \cdot -19.5129/54.9758 - 0.441425 \cdot -0.0746819/41.5513 - 0) \cdot 100 = 26.5425\ \%$$

where

k_{yy} = *0.745576* - interaction factors
$M_{y.Ed}$ = *-19.5129* kNm - design bending moment
$M_{b.Rd}$ = *54.9758* kNm - design load-bearing capacity of the element in lateral torsional buckling
k_{yz} = *0.441425* - interaction factors
$M_{z.Ed}$ = *-0.0746819* kNm - design bending moment
$M_{b.Rd}$ = *41.5513* kNm - design load-bearing capacity of the element in lateral torsional buckling
UF_w = *0* - component takes into account the reduction in load-bearing capacity of the section in case of warping
I_y = *1008.13* cm^4 - second moment of area about y-y axis
I_z = *535.651* cm^4 - second moment of area about z-z axis
$\overline{\lambda}_{LT}$ = *0.0974723* - non-dimensional slenderness for lateral-torsional buckling in elastic stage
$\overline{\lambda}_{LT.0}$ = *0.4* - rectilinear fragment of lateral torsional buckling curve for rolled sections
$M_{y.cr}$ = *5786.41* kNm - elastic critical moment for lateral-torsional buckling

$\overline{\lambda}_{LT}$ - non-dimensional slenderness for lateral-torsional buckling in elastic stage:

$$\overline{\lambda}_{LT} = (W_y \cdot fy \cdot 10^{-3}/M_{y.cr})^{1/2}$$

$$\overline{\lambda}_{LT} = (169.156 \cdot 325 \cdot 10^{-3}/5786.41)^{1/2} = 0.0974723$$

where

W_y = *169.156* cm^3 - section modulus
fy = *325* MPa - yield strength
$M_{y.cr}$ = *5786.41* kNm - elastic critical moment for lateral-torsional buckling

W_y - section modulus:

If criterion (Class = 1 OR Class = 2) is satisfied , then

$$W_y = W_{pl.y}$$

that is *criterion (1 = 1 OR 1 = 2) is satisfied , then*

W_y = *169.156* cm^3

where

$W_{pl.y}$ = *169.156* cm^3 - plastic section modulus
Class = *1* Table 5.2 - class of cross-section

$M_{y.cr}$ - elastic critical moment for lateral-torsional buckling:

$$M_{y.cr} = C_1 \cdot \Pi^2 \cdot E \cdot I_z \cdot 10^{-8} / L_z^2 \cdot ((k_z^2/kw^2 \cdot I_w \cdot 10^{-12}/(I_z \cdot 10^{-8}) + L_z^2 \cdot G \cdot I_t \cdot 10^{-8}/(3.14159^2 \cdot E \cdot I_z \cdot 10^{-8}) + (C_2 \cdot z_g \cdot 10^{-2} - C_3 \cdot z_j \cdot 10^{-2}) \cdot (C_2 \cdot z_g \cdot 10^{-2} - C_3 \cdot z_j \cdot 10^{-2}))^{1/2} - (C_2 \cdot z_g \cdot 10^{-2} - C_3 \cdot z_j \cdot 10^{-2})) \cdot 10^3$$

$$M_{y.cr} = 2.57 \cdot 3.14159^2 \cdot 210000 \cdot 535.651 \cdot 10^{-8}/1^2 \cdot ((1^2/1^2 \cdot 629.682 \cdot 10^{-12}/(535.651 \cdot 10^{-8}) + 1^2 \cdot 81000 \cdot 1208.38 \cdot 10^{-8}/(3.14159^2 \cdot 210000 \cdot 535.651 \cdot 10^{-8}) + (1.55 \cdot 7.5 \cdot 10^{-2} - 0.75 \cdot 0 \cdot 10^{-2}) \cdot (1.55 \cdot 7.5 \cdot 10^{-2} - 0.75 \cdot 0 \cdot 10^{-2}))^{1/2} - (1.55 \cdot 7.5 \cdot 10^{-2} - 0.75 \cdot 0 \cdot 10^{-2})) \cdot 10^3 = 5786.41 \text{ kNm}$$

where

C_1 = *2.57* - factor
Π = *3.14159* - mathematical constant
E = *210000* MPa - modulus of elasticity
I_z = *535.651* cm^4 - second moment of area about z-z axis
L_z = *1* m - buckling length
k_z = *1* - factor for considering type of restraints at the end of the element from rotation about axis Z1-Z1*
kw = *1* - effective length factor for warping
I_w = *629.682* cm^6 - warping constant
G = *81000* MPa - shear modulus
I_t = *1208.38* cm^4 - torsional constant
C_2 = *1.55* - factor
z_g = *7.5* cm - coordinate of the point where external load is applied to relative to the shear (flexural) centre of the section
C_3 = *0.75* - factor
z_j = *0* cm - monosymmetry parameter

k_{yy} - interaction factors:

If criterion (Class = 3 OR Class = 4) is not satisfied , then

$$k_{yy} = C_{my} \cdot (1 + (\overline{\lambda}_y - 0.2) \cdot |N_{Ed}|/(\chi_y \cdot N_{Rk}/\gamma_{M1}))$$

that is *criterion (1 = 3 OR 1 = 4) is not satisfied , then*

$$k_{yy} = 0.745576 \cdot (1 + (0.117065 - 0.2) \cdot |0|/(1 \cdot 1145.38/1)) = 0.745576$$

where

C_{my} = *0.745576* - factor
$\overline{\lambda}_y$ = *0.117065* - non-dimensional slenderness of the member for buckling
N_{Ed} = *0* kN - design axial force
χ_y = *1* - reduction factor for the buckling mode corresponding to the buckling curve, about Y1-Y1*
N_{Rk} = *1145.38* kN - characteristic value for load-bearing capacity in compression
γ_{M1} = *1* - partial safety factor in determining load-bearing capacity of element in buckling
Class = *1* Table 5.2 - class of cross-section

Class - class of cross-section:

Class = $Class_{out.el.}$

Class = *1* = *1* Table 5.2

where

$Class_{out.el.}$ = *1* Table 5.2

C_{my} - factor:

$$C_{my} = 0.2 + 0.8 \cdot \alpha_s$$

$$C_{my} = 0.2 + 0.8 \cdot 0.681971 = 0.745576$$

where

$\alpha_s = 0.681971$ - factor

$\overline{\lambda}_y$ - non-dimensional slenderness of the member for buckling:

$$\overline{\lambda}_y = (fy \cdot A \cdot 10^{-1} / N_{cr})^{1/2}$$

$$\overline{\lambda}_y = (325 \cdot 35.2425 \cdot 10^{-1} / 83578.4)^{1/2} = 0.117065$$

where

$fy = 325$ MPa - yield strength
$A = 35.2425$ cm^2 - area of gross cross-section
$N_{cr} = 83578.4$ kN - elastic critical force for the relevant buckling mode

N_{Rk} - characteristic value for load-bearing capacity in compression:

$$N_{Rk} = fy \cdot A \cdot 10^{-1}$$

$$N_{Rk} = 325 \cdot 35.2425 \cdot 10^{-1} = 1145.38 \text{ kN}$$

where

$fy = 325$ MPa - yield strength
$A = 35.2425$ cm^2 - area of gross cross-section

$M_{b.Rd}$ - design load-bearing capacity of the element in lateral torsional buckling:

If criterion ($I_y \geq I_z$) is satisfied and
criterion ($\overline{\lambda}_{LT} > \overline{\lambda}_{LT.0}$ AND $|M_{y.Ed}|/M_{y.cr} > \overline{\lambda}_{LT.0}^2$) is not satisfied , then

$$M_{b.Rd} = W_y \cdot 10^{-3} \cdot fy / \gamma_{M1}$$

that is *criterion (1008.13 ≥ 535.651) is satisfied and*
criterion (0.0974723 > 0.4 AND |-19.5129|/5786.41 > 0.4^2) is not satisfied , then

$$M_{b.Rd} = 169.156 \cdot 10^{-3} \cdot 325/1 = 54.9758 \text{ kNm}$$

where

$W_y = 169.156$ cm^3 - section modulus
$fy = 325$ MPa - yield strength
$\gamma_{M1} = 1$ - partial safety factor in determining load-bearing capacity of element in buckling
$I_y = 1008.13$ cm^4 - second moment of area about y-y axis
$I_z = 535.651$ cm^4 - second moment of area about z-z axis
$\overline{\lambda}_{LT} = 0.0974723$ - non-dimensional slenderness for lateral-torsional buckling in elastic stage
$\overline{\lambda}_{LT.0} = 0.4$ - rectilinear fragment of lateral torsional buckling curve for rolled sections
$M_{y.Ed} = -19.5129$ kNm - design bending moment
$M_{y.cr} = 5786.41$ kNm - elastic critical moment for lateral-torsional buckling

k_{yz} - interaction factors:

If criterion (Class = 3 OR Class = 4) is not satisfied , then

$$k_{yz} = 0.6 \cdot k_{zz}$$

that is *criterion (1 = 3 OR 1 = 4) is not satisfied* , then

$k_{yz} = 0.6 \cdot 0.735708 = 0.441425$

where

$k_{zz} = 0.735708$ - interaction factors
Class = *1* Table 5.2 - class of cross-section

k_{zz} - interaction factors:

$k_{zz} = C_{mz} \cdot (1 + (\overline{\lambda}_z - 0.2) \cdot |N_{Ed}| / (\chi_z \cdot N_{Rk} / \gamma_{M1}))$

$k_{zz} = 0.735708 \cdot (1 + (0.321199 - 0.2) \cdot |0| / (0.972488 \cdot 1145.38/1)) = 0.735708$

where

$C_{mz} = 0.735708$ - factor
$\overline{\lambda}_z = 0.321199$ - non-dimensional slenderness of the member for buckling
$N_{Ed} = 0$ kN - design axial force
$\chi_z = 0.972488$ - reduction factor for the buckling mode corresponding to the buckling curve, about Z1-Z1*
$N_{Rk} = 1145.38$ kN - characteristic value for load-bearing capacity in compression
$\gamma_{M1} = 1$ - partial safety factor in determining load-bearing capacity of element in buckling

C_{mz} - factor:

$C_{mz} = 0.2 + 0.8 \cdot \alpha_s$

$C_{mz} = 0.2 + 0.8 \cdot 0.669635 = 0.735708$

where

$\alpha_s = 0.669635$ - factor

$\overline{\lambda}_z$ - non-dimensional slenderness of the member for buckling:

$\overline{\lambda}_z = (fy \cdot A \cdot 10^{-1} / N_{cr})^{1/2}$

$\overline{\lambda}_z = (325 \cdot 35.2425 \cdot 10^{-1} / 11102)^{1/2} = 0.321199$

where

$fy = 325$ MPa - yield strength
$A = 35.2425$ cm^2 - area of gross cross-section
$N_{cr} = 11102$ kN - elastic critical force for the relevant buckling mode

χ_z - reduction factor for the buckling mode corresponding to the buckling curve, about Z1-Z1*:

$\chi_z = 1 / (\Phi + (\Phi^2 - \overline{\lambda}_z^2)^{1/2})$

$\chi_z = 1 / (0.56431 + (0.56431^2 - 0.321199^2)^{1/2}) = 0.972488$

where

$\Phi = 0.56431$ - value to determine the reduction factor χ
$\overline{\lambda}_z = 0.321199$ - non-dimensional slenderness of the member for buckling

Φ - value to determine the reduction factor χ:

$\Phi = 0.5 \cdot (1 + \alpha \cdot (\overline{\lambda}_z - 0.2) + \overline{\lambda}_z^2)$

$\Phi = 0.5 \cdot (1 + 0.21 \cdot (0.321199 - 0.2) + 0.321199^2) = 0.56431$

where

α = *0.21* - imperfection factor
$\bar{\lambda}_z$ = *0.321199* - non-dimensional slenderness of the member for buckling

$M_{z.Ed}$ - design bending moment:

$$M_{z.Ed} = -M_{y.Ed}$$

$$M_{z.Ed} = -0.0746819 = -0.0746819 \text{ kNm}$$

where

$M_{y.Ed}$ = *0.0746819* kNm - design bending moment

$M_{b.Rd}$ - design load-bearing capacity of the element in lateral torsional buckling:

If criterion ($I_y \geq I_z$) is satisfied and
criterion ($\bar{\lambda}_{LT} > \bar{\lambda}_{LT.0}$ AND $|M_{y.Ed}|/M_{y.cr} > \bar{\lambda}_{LT.0}^2$) is not satisfied , then

$$M_{b.Rd} = W_z \cdot 10^{-3} \cdot fy/\gamma_{M1}$$

that is *criterion (1008.13 ≥ 535.651) is satisfied and*
criterion (0.0974723 > 0.4 AND |-19.5129|/5786.41 > 0.4^2) is not satisfied , then

$$M_{b.Rd} = 127.85 \cdot 10^{-3} \cdot 325/1 = 41.5513 \text{ kNm}$$

where

W_z = *127.85* cm^3 - section modulus
fy = *325* MPa - yield strength
γ_{M1} = *1* - partial safety factor in determining load-bearing capacity of element in buckling
I_y = *1008.13* cm^4 - second moment of area about y-y axis
I_z = *535.651* cm^4 - second moment of area about z-z axis
$\bar{\lambda}_{LT}$ = *0.0974723* - non-dimensional slenderness for lateral-torsional buckling in elastic stage
$\bar{\lambda}_{LT.0}$ = *0.4* - rectilinear fragment of lateral torsional buckling curve for rolled sections
$M_{y.Ed}$ = *-19.5129* kNm - design bending moment
$M_{y.cr}$ = *5786.41* kNm - elastic critical moment for lateral-torsional buckling

W_z - section modulus:

If criterion (Class = 1 OR Class = 2) is satisfied , then

$$W_z = W_{pl.z}$$

that is *criterion (1 = 1 OR 1 = 2) is satisfied , then*

$$W_z = 127.85 \text{ cm}^3$$

where

$W_{pl.z}$ = *127.85* cm^3 - plastic section modulus
Class = *1* Table 5.2 - class of cross-section

UF_w - component takes into account the reduction in load-bearing capacity of the section in case of warping:

$$UF_w = \sigma_w/(fy \cdot \gamma_{M0})$$

$$UF_w = 0/(325 \cdot 1) = 0$$

where

σ_w = *0* MPa - normal stress at point from warping
fy = *325* MPa - yield strength
γ_{M0} = *1* - partial safety factor in determining load-bearing capacity of cross-sections by strength regardless of class

σ_w - normal stress at point from warping:

$\sigma_w = B_{w.Ed} \cdot w_i / I_w \cdot 10^5$

$\sigma_w = 0 \cdot -6.97863 / 629.682 \cdot 10^5 = 0$ MPa

where

$B_{w.Ed} = 0$ kNm^2 - design balue for bimoment
$w_i = -6.97863$ cm^2 - warping coordinate for the point (sign "-" for compressive stress)
$I_w = 629.682$ cm^6 - warping constant

Design combination of loads No. 85 :

N_{Ed}, kN	$M_{y,Ed}$, kN·m	$V_{z,Ed}$, kN	$M_{z,Ed}$, kN·m	$V_{y,Ed}$, kN	$M_{x,Ed}$, kN·m	$B_{w,Ed}$, kN·m^2	$T_{w,Ed}$, kN·m
0	-0.08426	0	1.67	0	0	0	0

$UF_{deflection}$ - utilization percentage for load-bearing capacity of structural element by deflection:

$UF_{deflection} = |\delta_y| / (L \cdot 10^3 \cdot 1/\delta_{lim}) \cdot 100$

$UF_{deflection} = |-2.24006| / (2.81299 \cdot 10^3 \cdot 0.004) \cdot 100 = 19.9082$ %

where

$\delta_y = -2.24006$ mm - max deflection
$L = 2.81299$ m - length
$1/\delta_{lim} = 0.004$ - ultimate relative deflection

$1/\delta_{lim}$ - ultimate relative deflection:

$1/\delta_{lim} = 1/250$

$1/\delta_{lim} = 1/250 = 0.004$

Design combination of loads No. 84, combination No. 12, fundamental combination (type I) :

N_{Ed}, kN	$M_{y,Ed}$, kN·m	$V_{z,Ed}$, kN	$M_{z,Ed}$, kN·m	$V_{y,Ed}$, kN	$M_{x,Ed}$, kN·m	$B_{w,Ed}$, kN·m^2	$T_{w,Ed}$, kN·m
-7.39	0	0	-20.17	14.6	0	0	0

$UF_{l.b.web}$ - utilization percentage for load-bearing capacity of structural element in local buckling of web:

$UF_{l.b.web} = UF_{l.b.}$

$UF_{l.b.web} = 16.7941$ %

where

$UF_{l.b.} = 16.7941$ % - local buckling

$UF_{l.b.}$ - local buckling:

If criterion ($\Psi > -1$) is satisfied , then

$UF_{l.b.} = d/t_w / (42 \cdot \varepsilon / (0.67 + 0.33 \cdot \Psi)) \cdot 100$

that is *criterion (0.99357 > -1) is satisfied , then*

$UF_{l.b.} = 9.5/(42 \cdot 1.34398/(0.67 + 0.33 \cdot 0.99357)) \cdot 100 = 16.7941$ %

where

$d/t_w = 9.5$ - width-to-thickness ratios
$\varepsilon = 1.34398$ - coefficient depending on $\sigma_{com.Ed}$
$\Psi = 0.99357$ Table 5.2 - ratio of stresses

Ψ - ratio of stresses:

$\Psi = \sigma_2/\sigma_1$

$\Psi = 129.264/130.101 = 0.99357$ Table 5.2

where

$\sigma_2 = 129.264$ MPa - design normal stress (compressive stress is positive)
$\sigma_1 = 130.101$ MPa - design normal stress (compressive stress is positive)

d/t_w - width-to-thickness ratios:

$d/t_w = (b - 3 \cdot t)/t$

$d/t_w = (10 - 3 \cdot 0.8)/0.8 = 9.5$

where

$b = 10$ cm - short leg of angle
$t = 0.8$ cm - plate thickness

b - short leg of angle:

$b = B_f$

$b = 10$ cm

where

$B_f = 10$ cm - flange width

t - plate thickness:

$t = T_f$

$t = 0.8$ cm

where

$T_f = 0.8$ cm - flange thickness

ε - coefficient depending on $\sigma_{com.Ed}$:

$\varepsilon = (235/\sigma_{com.Ed})^{1/2}$

$\varepsilon = (235/130.101)^{1/2} = 1.34398$

where

$\sigma_{com.Ed} = 130.101$ MPa - max design compressive stress in element

Design combination of loads No. 84, combination No. 12, fundamental combination (type I) :

N_{Ed}, kN	$M_{y,Ed}$, kN·m	$V_{z,Ed}$, kN	$M_{z,Ed}$, kN·m	$V_{y,Ed}$, kN	$M_{x,Ed}$, kN·m	$B_{w,Ed}$, kN·m^2	$T_{w,Ed}$, kN·m
-7.39	0	0	-20.17	14.6	0	0	0

$UF_{l.b.flange}$ - utilization percentage for load-bearing capacity of structural element in local buckling of flange:

$UF_{l.b.flange} = UF_{l.b.}$

$UF_{l.b.flange} = 16.7941\ \%$

where

$UF_{l.b.} = 16.7941\ \%$ - local buckling

Design combination of loads No. 63, combination No. 3, fundamental combination (type I) :

N_{Ed}, kN	$M_{y,Ed}$, kN·m	$V_{z,Ed}$, kN	$M_{z,Ed}$, kN·m	$V_{y,Ed}$, kN	$M_{x,Ed}$, kN·m	$B_{w,Ed}$, kN·m^2	$T_{w,Ed}$, kN·m
-5.442	0	0	-19.29	16.97	0	0	0

UF_{ULS} - utilization percentage for load-bearing capacity of structural element by ultimate limit state:

$UF_{ULS} = UF_{bending}$

$UF_{ULS} = 35.0948\ \%$

where

$UF_{bending} = 35.0948\ \%$ - utilization percentage for load-bearing capacity of structural element in bending

Design combination of loads No. 85 :

N_{Ed}, kN	$M_{y,Ed}$, kN·m	$V_{z,Ed}$, kN	$M_{z,Ed}$, kN·m	$V_{y,Ed}$, kN	$M_{x,Ed}$, kN·m	$B_{w,Ed}$, kN·m^2	$T_{w,Ed}$, kN·m
0	-0.08426	0	1.67	0	0	0	0

UF_{SLS} - utilization percentage for load-bearing capacity of structural element by serviceability limit state:

$UF_{SLS} = UF_{deflection}$

$UF_{SLS} = 19.9082\ \%$

where

$UF_{deflection} = 19.9082\ \%$ - utilization percentage for load-bearing capacity of structural element by deflection

Design combination of loads No. 84, combination No. 12, fundamental combination (type I) :

N_{Ed}, kN	$M_{y,Ed}$, kN·m	$V_{z,Ed}$, kN	$M_{z,Ed}$, kN·m	$V_{y,Ed}$, kN	$M_{x,Ed}$, kN·m	$B_{w,Ed}$, kN·m^2	$T_{w,Ed}$, kN·m
-7.39	0	0	-20.17	14.6	0	0	0

$UF_{L.B.}$ - utilization percentage for load-bearing capacity of structural element in local buckling:

$UF_{L.B.} = UF_{l.b.flange}$

$UF_{L.B.} = 16.7941\ \%$

where

$UF_{l.b.flange} = 16.7941\ \%$ - utilization percentage for load-bearing capacity of structural element in local buckling of flange

Design combination of loads No. 61, combination No. 1, fundamental combination (type I) :

N_{Ed}, kN	$M_{y,Ed}$, kN·m	$V_{z,Ed}$, kN	$M_{z,Ed}$, kN·m	$V_{y,Ed}$, kN	$M_{x,Ed}$, kN·m	$B_{w,Ed}$, kN·m^2	$T_{w,Ed}$, kN·m
-4.95	0.07468	0.07859	-19.51	17.03	-0.003682	0	0

T_{cr} = 685°C - critical temperature for element of steel structure :

Buckling resistance of a member in bending				
θ_{cr}, °C	$k_{y,\theta}$	$\gamma_{M,fi}$	$\gamma_{M,0}$	$\frac{M_{y,fi,Ed}}{M_{y,fi,\theta,Rd}} + \frac{M_{z,fi,Ed}}{M_{z,fi,\theta,Rd}} \le 1$
100	1	1	1	0.232102
200	1	1	1	0.232102
300	1	1	1	0.232102
400	1	1	1	0.232102
500	0.78	1	1	0.297567
600	0.47	1	1	0.493835
700	0.23	1	1	1.00914
800	0.11	1	1	2.11002
900	0.06	1	1	3.86837
1000	0.04	1	1	5.80256
1100	0.02	1	1	11.6051
Critical temperature due to bending, ° C				698.226

Buckling of a member in one-plane bending								
θ_{cr}, °C	$k_{y,\theta}$	$k_{E,\theta}$	$\gamma_{M,fi}$	$\gamma_{M,0}$	$\lambda_{LT,\theta}$	φ_{θ}	$X_{LT,fi}$	$\frac{M_{y,fi,Ed}}{M_{b,fi,\theta,Rd}} + \frac{M_{z,fi,Ed}}{M_{b,fi,\theta,Rd}} \le 1$
100	1	1	1	1	0.0974723	0.531688	0.948438	0.244682
200	1	0.9	1	1	0.102745	0.533673	0.94575	0.245375
300	1	0.8	1	1	0.108977	0.536055	0.942582	0.246197
400	1	0.7	1	1	0.116502	0.538983	0.93877	0.247194
500	0.78	0.6	1	1	0.111136	0.536889	0.941487	0.316004
600	0.47	0.31	1	1	0.120019	0.540371	0.936992	0.52694
700	0.23	0.13	1	1	0.12965	0.544235	0.932139	1.08238
800	0.11	0.09	1	1	0.10776	0.535587	0.9432	2.2367
900	0.06	0.0675	1	1	0.0918978	0.529619	0.951289	4.06584
1000	0.04	0.045	1	1	0.0918978	0.529619	0.951289	6.09877
1100	0.02	0.0225	1	1	0.0918978	0.529619	0.951289	12.1975
Critical temperature due to buckling, ° C								685.169

Critical temperature, ° C	685.169

Shear resistance				
θ_{cr}, °C	$k_{y,\theta}$	$\gamma_{M,0}$	$\gamma_{M,fi}$	$\frac{V_{fi,Ed}}{V_{fi,\theta,Rd}} \le 1$
100	1	1	1	0.0288397

200	1	1	1	0.0288397
300	1	1	1	0.0288397
400	1	1	1	0.0288397
500	0.78	1	1	0.036974
600	0.47	1	1	0.0613611
700	0.23	1	1	0.12539
800	0.11	1	1	0.262179
900	0.06	1	1	0.480662
1000	0.04	1	1	0.720993
1100	0.02	1	1	1.44199
Critical temperature, ° C				1038.7

The influence of Mx force on fire analysis is not considered.

Class - the highest class of cross-section determined in computation of cross-section:

$Class = Class_{out.el.}$

$Class = 1 = 1$ Table 5.2

where

$Class_{out.el.} = 1$ Table 5.2

$Class_{out.el.}$ - the highest class of outstand elements:

If criterion ($\sigma_1 \leq 0$ AND $\sigma_2 \leq 0$) is satisfied , then

that is *criterion (-79.8472 ≤ 0 AND -80.2711 ≤ 0) is satisfied* , then

$Class_{out.el.} = 1$ Table 5.2

where

$\sigma_1 = -79.8472$ MPa - design normal stress (compressive stress is positive)
$\sigma_2 = -80.2711$ MPa - design normal stress (compressive stress is positive)

Design combination of loads No. 51, combination No. 3, fundamental combination (type I) :

N_{Ed}, kN	$M_{y,Ed}$, kN·m	$V_{z,Ed}$, kN	$M_{z,Ed}$, kN·m	$V_{y,Ed}$, kN	$M_{x,Ed}$, kN·m	$B_{w,Ed}$, kN·m^2	$T_{w,Ed}$, kN·m
-5.18	0	0	-11.86	14.25	0	0	0

$UF_{bending}$ - utilization percentage for load-bearing capacity of structural element in bending:

$UF_{bending} = |(-1 \cdot UF_{bending.y} + 0 \cdot UF_{bending.z} + UF_w)| \cdot 100$

$UF_{bending} = |(-1 \cdot 0.215672 + 0 \cdot 0 + 0)| \cdot 100 = 21.5672$ %

where

$UF_{bending.y} = 0.215672$ %/100% - utilization fraction for load-bearing capacity of the structural element in bending
$UF_{bending.z} = 0$ %/100% - utilization fraction for load-bearing capacity of the structural element in bending
$UF_w = 0$ - component takes into account the reduction in load-bearing capacity of the section in case of warping

$UF_{bending.y}$ - utilization fraction for load-bearing capacity of the structural element in bending:

$$UF_{bending.y} = |M_{y.Ed}|/(W_{pl.y} \cdot fy \cdot 10^{-3}/\gamma_{M0}) + \rho_z$$

$$UF_{bending.y} = |-11.8568|/(169.156 \cdot 325 \cdot 10^{-3}/1) + 0 = 0.215672 \ \%/100\%$$

where

$M_{y.Ed} = -11.8568$ kNm - design bending moment
$W_{pl.y} = 169.156$ cm^3 - plastic section modulus
$fy = 325$ MPa - yield strength
$\gamma_{M0} = 1$ - partial safety factor in determining load-bearing capacity of cross-sections by strength regardless of class
$\rho_z = 0$ - reduction factor to determine reduced design value of the resistance to bending moment making allowance of the presence of shear force

$UF_{bending.z}$ - utilization fraction for load-bearing capacity of the structural element in bending:

$$UF_{bending.z} = |M_{z.Ed}|/(W_{pl.z} \cdot fy \cdot 10^{-3}/\gamma_{M0}) + \rho_y$$

$$UF_{bending.z} = |0|/(127.85 \cdot 325 \cdot 10^{-3}/1) + 0 = 0 \ \%/100\%$$

where

$M_{z.Ed} = 0$ kNm - design bending moment
$W_{pl.z} = 127.85$ cm^3 - plastic section modulus
$fy = 325$ MPa - yield strength
$\gamma_{M0} = 1$ - partial safety factor in determining load-bearing capacity of cross-sections by strength regardless of class
$\rho_y = 0$ - reduction factor to determine reduced design value of the resistance to bending moment making allowance of the presence of shear force

$M_{z.Ed}$ - design bending moment:

$$M_{z.Ed} = -M_{y.Ed}$$

$$M_{z.Ed} = -0 = 0 \text{ kNm}$$

where

$M_{y.Ed} = 0$ kNm - design bending moment

UF_w - component takes into account the reduction in load-bearing capacity of the section in case of warping:

$$UF_w = \sigma_w/(fy \cdot \gamma_{M0})$$

$$UF_w = 0/(325 \cdot 1) = 0$$

where

$\sigma_w = 0$ MPa - normal stress at point from warping
$fy = 325$ MPa - yield strength
$\gamma_{M0} = 1$ - partial safety factor in determining load-bearing capacity of cross-sections by strength regardless of class

σ_w - normal stress at point from warping:

$$\sigma_w = B_{w.Ed} \cdot w_i/I_w \cdot 10^5$$

$$\sigma_w = 0 \cdot 6.97863/629.682 \cdot 10^5 = 0 \text{ MPa}$$

where

$B_{w.Ed} = 0$ kNm^2 - design balue for bimoment
$w_i = 6.97863$ cm^2 - warping coordinate for the point (sign "-" for compressive stress)
$I_w = 629.682$ cm^6 - warping constant

Design combination of loads No. 49, combination No. 1, fundamental combination (type I) :

N_{Ed}, kN	$M_{y,Ed}$, kN·m	$V_{z,Ed}$, kN	$M_{z,Ed}$, kN·m	$V_{y,Ed}$, kN	$M_{x,Ed}$, kN·m	$B_{w,Ed}$, kN·m^2	$T_{w,Ed}$, kN·m
-4.688	0.03784	0.07859	-12.05	14.31	-0.003682	0	0

UF_{shear} - utilization percentage for load-bearing capacity of structural element in shear:

If criterion (Class = 3 OR Class = 4) is not satisfied , then

$UF_{shear} = UF_{shear.z}$

that is *criterion (1 = 3 OR 1 = 4) is not satisfied , then*

$UF_{shear} = 3.69733$ %

where

$UF_{shear.z} = 3.69733$ % - utilization percentage for load-bearing capacity of structural element in shear
Class = *1* Table 5.2 - class of cross-section

Class - class of cross-section:

$Class = Class_{out.el.}$

Class = *1* = *1* Table 5.2

where

$Class_{out.el.}$ = *1* Table 5.2

$UF_{shear.z}$ - utilization percentage for load-bearing capacity of structural element in shear:

$UF_{shear.z} = |V_{z.Ed}|/V_{pl.z.Rd} \cdot 100$

$UF_{shear.z} = |-14.3119|/387.088 \cdot 100 = 3.69733$ %

where

$V_{z.Ed} = -14.3119$ kN - design shear force
$V_{pl.z.Rd} = 387.088$ kN - design load-bearing capacity of the cross-section in shear for plastic analysis

$V_{z.Ed}$ - design shear force:

$V_{z.Ed} = -V_{y.Ed}$

$V_{z.Ed} = -14.3119 = -14.3119$ kN

where

$V_{y.Ed} = 14.3119$ kN - design shear force

$V_{pl.z.Rd}$ - design load-bearing capacity of the cross-section in shear for plastic analysis:

$V_{pl.z.Rd} = V_{pl.T.z.Rd}$

$V_{pl.z.Rd} = 387.088$ kN

where

$V_{pl.T.z.Rd} = 387.088$ kN - reduced design load-bending capacity of cross-section in shear for the plastic analysis with account of torsion

$V_{pl.T.z.Rd}$ - reduced design load-bending capacity of cross-section in shear for the plastic analysis with account of torsion:

$$V_{pl.T.z.Rd} = V_{pl.z.Rd} \cdot (1 - \tau_{t.Ed} / (fy / 3^{1/2} / \gamma_{M0}))^{1/2}$$

$$V_{pl.T.z.Rd} = 387.106 \cdot (1 - 0.0176164 / (325 / 3^{1/2} / 1))^{1/2} = 387.088 \text{ kN}$$

where

$V_{pl.z.Rd} = 387.106$ kN - design load-bearing capacity of the cross-section in shear for plastic analysis
$\tau_{t.Ed} = 0.0176164$ MPa - design shear stress caused by torsional moment
$fy = 325$ MPa - yield strength
$\gamma_{M0} = 1$ - partial safety factor in determining load-bearing capacity of cross-sections by strength regardless of class

$V_{pl.z.Rd}$ - design load-bearing capacity of the cross-section in shear for plastic analysis:

$$V_{pl.z.Rd} = A_{v.z} \cdot fy \cdot 10^{-1} / (3^{1/2} \cdot \gamma_{M0})$$

$$V_{pl.z.Rd} = 20.6304 \cdot 325 \cdot 10^{-1} / (3^{1/2} \cdot 1) = 387.106 \text{ kN}$$

where

$A_{v.z} = 20.6304$ cm^2 - shear area of the cross-section along the local axis Z1*
$fy = 325$ MPa - yield strength
$\gamma_{M0} = 1$ - partial safety factor in determining load-bearing capacity of cross-sections by strength regardless of class

$\tau_{t.Ed}$ - design shear stress caused by torsional moment:

$$\tau_{t.Ed} = |\tau_{t.Ed}|$$

$$\tau_{t.Ed} = |0.0176164| = 0.0176164 \text{ MPa}$$

where

$\tau_{t.Ed} = 0.0176164$ MPa - design shear stress caused by torsional moment

$\tau_{t.Ed}$ - design shear stress caused by torsional moment:

$$\tau_{t.Ed} = |M_{x.Ed}| \cdot 10^3 / W_f$$

$$\tau_{t.Ed} = |-0.00368224| \cdot 10^3 / 209.024 = 0.0176164 \text{ MPa}$$

where

$M_{x.Ed} = -0.00368224$ kNm - design torsion moment
$W_f = 209.024$ cm^3 - torsional section modulus for flange

Design combination of loads No. 53, combination No. 5, fundamental combination (type I) :

N_{Ed}, kN	$M_{y,Ed}$, kN·m	$V_{z,Ed}$, kN	$M_{z,Ed}$, kN·m	$V_{y,Ed}$, kN	$M_{x,Ed}$, kN·m	$B_{w,Ed}$, kN·m^2	$T_{w,Ed}$, kN·m
-3.388	0.06306	0.131	-9.02	10.29	-0.006137	0	0

$UF_{torsion}$ - utilization percentage for load-bearing capacity of structural element in torsion:

$$UF_{torsion} = (\tau_{t.Ed} + \tau_{w.Ed}) / (fy / 3^{1/2} / \gamma_{M0}) \cdot 100$$

$$UF_{torsion} = (0.0293604 + 0) / (325 / 3^{1/2} / 1) \cdot 100 = 0.0156473 \text{ \%}$$

where

$\tau_{t.Ed}$ = *0.0293604* MPa - design shear stress caused by torsional moment
$\tau_{w.Ed}$ = *0* MPa - design shear stress in warping torsion
f_y = *325* MPa - yield strength
γ_{M0} = *1* - partial safety factor in determining load-bearing capacity of cross-sections by strength regardless of class

$\tau_{t.Ed}$ - design shear stress caused by torsional moment:

$$\tau_{t.Ed} = |\tau_{t.Ed}|$$

$$\tau_{t.Ed} = |0.0293604| = 0.0293604 \text{ MPa}$$

where

$\tau_{t.Ed}$ = *0.0293604* MPa - design shear stress caused by torsional moment

$\tau_{t.Ed}$ - design shear stress caused by torsional moment:

$$\tau_{t.Ed} = |M_{x.Ed}| \cdot 10^3 / W_f$$

$$\tau_{t.Ed} = |-0.00613703| \cdot 10^3 / 209.024 = 0.0293604 \text{ MPa}$$

where

$M_{x.Ed}$ = *-0.00613703* kNm - design torsion moment
W_f = *209.024* cm^3 - torsional section modulus for flange

$\tau_{w.Ed}$ - design shear stress in warping torsion:

$$\tau_{w.Ed} = |\tau_{w.Ed}|$$

$$\tau_{w.Ed} = |0| = 0 \text{ MPa}$$

where

$\tau_{w.Ed}$ = *0* MPa - design shear stress in warping torsion

Design combination of loads No. 49, combination No. 1, fundamental combination (type I) :

N_{Ed}, kN	$M_{y,Ed}$, kN·m	$V_{z,Ed}$, kN	$M_{z,Ed}$, kN·m	$V_{y,Ed}$, kN	$M_{x,Ed}$, kN·m	$B_{w,Ed}$, kN·m^2	$T_{w,Ed}$, kN·m
-4.688	0.03784	0.07859	-12.05	14.31	-0.003682	0	0

$UF_{buckling}$ - utilization percentage for load-bearing capacity of structural element by overall stability:

$$UF_{buckling} = UF_{buckl.about\ Z1}$$

$$UF_{buckling} = 16.3772\ \%$$

where

$UF_{buckl.about\ Z1}$ = *16.3772* % - utilization percentage for load-bearing capacity of structural element for buckling relative to local axis Z1

$UF_{buckl.about\ Z1}$ - utilization percentage for load-bearing capacity of structural element for buckling relative to local axis Z1:

$$UF_{buckl.about\ Z1} = UF_{buckl.about\ Y1}$$

$$UF_{buckl.about\ Z1} = 16.3772\ \%$$

where

$UF_{buckl.about\ Y1}$ = *16.3772* % - utilization percentage for load-bearing capacity of structural element for buckling relative to local axis Y1*

$UF_{buckl.about\ Y1}$ - utilization percentage for load-bearing capacity of structural element for buckling relative to local axis Y1*:

If criterion ($I_y \geq I_z$) is satisfied and
criterion ($\overline{\lambda}_{LT} > \overline{\lambda}_{LT.0}$ AND $|M_{y.Ed}|/M_{y.cr} > \overline{\lambda}_{LT.0}^2$) is not satisfied , then

$$UF_{buckl.about\ Y1} = ((-k_{yy}) \cdot M_{y.Ed}/M_{b.Rd} - k_{yz} \cdot M_{z.Ed}/M_{b.Rd} - UF_w) \cdot 100$$

that is *criterion (1008.13 ≥ 535.651) is satisfied and*
criterion (0.0974723 > 0.4 AND |-12.0462|/5786.41 > 0.4^2) is not satisfied , then

$$UF_{buckl.about\ Y1} = ((-0.745576) \cdot -12.0462/54.9758 - 0.441425 \cdot -0.0378375/41.5513 - 0) \cdot 100 = 16.3772\ \%$$

where

k_{yy} = *0.745576* - interaction factors
$M_{y.Ed}$ = *-12.0462* kNm - design bending moment
$M_{b.Rd}$ = *54.9758* kNm - design load-bearing capacity of the element in lateral torsional buckling
k_{yz} = *0.441425* - interaction factors
$M_{z.Ed}$ = *-0.0378375* kNm - design bending moment
$M_{b.Rd}$ = *41.5513* kNm - design load-bearing capacity of the element in lateral torsional buckling
UF_w = *0* - component takes into account the reduction in load-bearing capacity of the section in case of warping
I_y = *1008.13* cm^4 - second moment of area about y-y axis
I_z = *535.651* cm^4 - second moment of area about z-z axis
$\overline{\lambda}_{LT}$ = *0.0974723* - non-dimensional slenderness for lateral-torsional buckling in elastic stage
$\overline{\lambda}_{LT.0}$ = *0.4* - rectilinear fragment of lateral torsional buckling curve for rolled sections
$M_{y.cr}$ = *5786.41* kNm - elastic critical moment for lateral-torsional buckling

$\overline{\lambda}_{LT}$ - non-dimensional slenderness for lateral-torsional buckling in elastic stage:

$$\overline{\lambda}_{LT} = (W_y \cdot fy \cdot 10^{-3}/M_{y.cr})^{1/2}$$

$$\overline{\lambda}_{LT} = (169.156 \cdot 325 \cdot 10^{-3}/5786.41)^{1/2} = 0.0974723$$

where

W_y = *169.156* cm^3 - section modulus
fy = *325* MPa - yield strength
$M_{y.cr}$ = *5786.41* kNm - elastic critical moment for lateral-torsional buckling

W_y - section modulus:

If criterion (Class = 1 OR Class = 2) is satisfied , then

$$W_y = W_{pl.y}$$

that is *criterion (1 = 1 OR 1 = 2) is satisfied , then*

$$W_y = 169.156\ cm^3$$

where

$W_{pl.y}$ = *169.156* cm^3 - plastic section modulus
Class = *1* Table 5.2 - class of cross-section

$M_{y.cr}$ - elastic critical moment for lateral-torsional buckling:

$$M_{y,cr} = C_1 \cdot \Pi^2 \cdot E \cdot I_z \cdot 10^{-8} / L_z^2 \cdot ((k_z^2 / kw^2 \cdot I_w \cdot 10^{-12} / (I_z \cdot 10^{-8}) + L_z^2 \cdot G \cdot I_t \cdot 10^{-8} / (3.14159^2 \cdot E \cdot I_z \cdot 10^{-8}) + (C_2 \cdot z_g \cdot 10^{-2} - C_3 \cdot z_j \cdot 10^{-2}) \cdot (C_2 \cdot z_g \cdot 10^{-2} - C_3 \cdot z_j \cdot 10^{-2}))^{1/2} - (C_2 \cdot z_g \cdot 10^{-2} - C_3 \cdot z_j \cdot 10^{-2})) \cdot 10^3$$

$$M_{y,cr} = 2.57 \cdot 3.14159^2 \cdot 210000 \cdot 535.651 \cdot 10^{-8} / 1^2 \cdot ((1^2 / 1^2 \cdot 629.682 \cdot 10^{-12} / (535.651 \cdot 10^{-8}) + 1^2 \cdot 81000 \cdot 1208.38 \cdot 10^{-8} / (3.14159^2 \cdot 210000 \cdot 535.651 \cdot 10^{-8}) + (1.55 \cdot 7.5 \cdot 10^{-2} - 0.75 \cdot 0 \cdot 10^{-2}) \cdot (1.55 \cdot 7.5 \cdot 10^{-2} - 0.75 \cdot 0 \cdot 10^{-2}))^{1/2} - (1.55 \cdot 7.5 \cdot 10^{-2} - 0.75 \cdot 0 \cdot 10^{-2})) \cdot 10^3 = 5786.41 \text{ kNm}$$

where

$C_1 = 2.57$ - factor
$\Pi = 3.14159$ - mathematical constant
$E = 210000$ MPa - modulus of elasticity
$I_z = 535.651$ cm^4 - second moment of area about z-z axis
$L_z = 1$ m - buckling length
$k_z = 1$ - factor for considering type of restraints at the end of the element from rotation about axis Z1-Z1*
$kw = 1$ - effective length factor for warping
$I_w = 629.682$ cm^6 - warping constant
$G = 81000$ MPa - shear modulus
$I_t = 1208.38$ cm^4 - torsional constant
$C_2 = 1.55$ - factor
$z_g = 7.5$ cm - coordinate of the point where external load is applied to relative to the shear (flexural) centre of the section
$C_3 = 0.75$ - factor
$z_j = 0$ cm - monosymmetry parameter

k_{yy} - interaction factors:

If criterion (Class = 3 OR Class = 4) is not satisfied , then

$$k_{yy} = C_{my} \cdot (1 + (\overline{\lambda}_y - 0.2) \cdot |N_{Ed}| / (\chi_y \cdot N_{Rk} / \gamma_{M1}))$$

that is *criterion (1 = 3 OR 1 = 4) is not satisfied , then*

$$k_{yy} = 0.745576 \cdot (1 + (0.117065 - 0.2) \cdot |0| / (1 \cdot 1145.38 / 1)) = 0.745576$$

where

$C_{my} = 0.745576$ - factor
$\overline{\lambda}_y = 0.117065$ - non-dimensional slenderness of the member for buckling
$N_{Ed} = 0$ kN - design axial force
$\chi_y = 1$ - reduction factor for the buckling mode corresponding to the buckling curve, about Y1-Y1*
$N_{Rk} = 1145.38$ kN - characteristic value for load-bearing capacity in compression
$\gamma_{M1} = 1$ - partial safety factor in determining load-bearing capacity of element in buckling
Class = 1 Table 5.2 - class of cross-section

Class - class of cross-section:

$$\text{Class} = \text{Class}_{out.el.}$$

$$\text{Class} = 1 = 1 \text{ Table 5.2}$$

where

$\text{Class}_{out.el.} = 1$ Table 5.2

C_{my} - factor:

$$C_{my} = 0.2 + 0.8 \cdot \alpha_s$$

$$C_{my} = 0.2 + 0.8 \cdot 0.681971 = 0.745576$$

where

$\alpha_s = 0.681971$ - factor

$\overline{\lambda}_y$ - non-dimensional slenderness of the member for buckling:

$$\overline{\lambda}_y = (fy \cdot A \cdot 10^{-1}/N_{cr})^{1/2}$$

$$\overline{\lambda}_y = (325 \cdot 35.2425 \cdot 10^{-1}/83578.4)^{1/2} = 0.117065$$

where

$fy = 325$ MPa - yield strength
$A = 35.2425$ cm^2 - area of gross cross-section
$N_{cr} = 83578.4$ kN - elastic critical force for the relevant buckling mode

N_{Rk} - characteristic value for load-bearing capacity in compression:

$$N_{Rk} = fy \cdot A \cdot 10^{-1}$$

$$N_{Rk} = 325 \cdot 35.2425 \cdot 10^{-1} = 1145.38 \text{ kN}$$

where

$fy = 325$ MPa - yield strength
$A = 35.2425$ cm^2 - area of gross cross-section

$M_{b.Rd}$ - design load-bearing capacity of the element in lateral torsional buckling:

If criterion ($I_y \geq I_z$) is satisfied and
criterion ($\overline{\lambda}_{LT} > \overline{\lambda}_{LT.0}$ AND $|M_{y.Ed}|/M_{y.cr} > \overline{\lambda}_{LT.0}^2$) is not satisfied , then

$$M_{b.Rd} = W_y \cdot 10^{-3} \cdot fy/\gamma_{M1}$$

that is *criterion (1008.13 ≥ 535.651) is satisfied and*
criterion (0.0974723 > 0.4 AND |-12.0462|/5786.41 > 0.4^2) is not satisfied , then

$$M_{b.Rd} = 169.156 \cdot 10^{-3} \cdot 325/1 = 54.9758 \text{ kNm}$$

where

$W_y = 169.156$ cm^3 - section modulus
$fy = 325$ MPa - yield strength
$\gamma_{M1} = 1$ - partial safety factor in determining load-bearing capacity of element in buckling
$I_y = 1008.13$ cm^4 - second moment of area about y-y axis
$I_z = 535.651$ cm^4 - second moment of area about z-z axis
$\overline{\lambda}_{LT} = 0.0974723$ - non-dimensional slenderness for lateral-torsional buckling in elastic stage
$\overline{\lambda}_{LT.0} = 0.4$ - rectilinear fragment of lateral torsional buckling curve for rolled sections
$M_{y.Ed} = -12.0462$ kNm - design bending moment
$M_{y.cr} = 5786.41$ kNm - elastic critical moment for lateral-torsional buckling

k_{yz} - interaction factors:

If criterion (Class = 3 OR Class = 4) is not satisfied , then

$$k_{yz} = 0.6 \cdot k_{zz}$$

that is *criterion (1 = 3 OR 1 = 4) is not satisfied , then*

$$k_{yz} = 0.6 \cdot 0.735708 = 0.441425$$

where

$k_{zz} = 0.735708$ - interaction factors
Class = *1* Table 5.2 - class of cross-section

k_{zz} - interaction factors:

$$k_{zz} = C_{mz} \cdot (1 + (\lambda_z - 0.2) \cdot |N_{Ed}| / (\chi_z \cdot N_{Rk} / \gamma_{M1}))$$

$$k_{zz} = 0.735708 \cdot (1 + (0.321199 - 0.2) \cdot |0| / (0.972488 \cdot 1145.38 / 1)) = 0.735708$$

where

$C_{mz} = 0.735708$ - factor
$\overline{\lambda}_z = 0.321199$ - non-dimensional slenderness of the member for buckling
$N_{Ed} = 0$ kN - design axial force
$\chi_z = 0.972488$ - reduction factor for the buckling mode corresponding to the buckling curve, about Z1-Z1*
$N_{Rk} = 1145.38$ kN - characteristic value for load-bearing capacity in compression
$\gamma_{M1} = 1$ - partial safety factor in determining load-bearing capacity of element in buckling

C_{mz} - factor:

$$C_{mz} = 0.2 + 0.8 \cdot \alpha_s$$

$$C_{mz} = 0.2 + 0.8 \cdot 0.669635 = 0.735708$$

where

$\alpha_s = 0.669635$ - factor

$\overline{\lambda}_z$ - non-dimensional slenderness of the member for buckling:

$$\overline{\lambda}_z = (fy \cdot A \cdot 10^{-1} / N_{cr})^{1/2}$$

$$\overline{\lambda}_z = (325 \cdot 35.2425 \cdot 10^{-1} / 11102)^{1/2} = 0.321199$$

where

$fy = 325$ MPa - yield strength
$A = 35.2425$ cm^2 - area of gross cross-section
$N_{cr} = 11102$ kN - elastic critical force for the relevant buckling mode

χ_z - reduction factor for the buckling mode corresponding to the buckling curve, about Z1-Z1*:

$$\chi_z = 1 / (\Phi + (\Phi^2 - \overline{\lambda}_z^2)^{1/2})$$

$$\chi_z = 1 / (0.56431 + (0.56431^2 - 0.321199^2)^{1/2}) = 0.972488$$

where

$\Phi = 0.56431$ - value to determine the reduction factor χ
$\overline{\lambda}_z = 0.321199$ - non-dimensional slenderness of the member for buckling

Φ - value to determine the reduction factor χ:

$$\Phi = 0.5 \cdot (1 + \alpha \cdot (\overline{\lambda}_z - 0.2) + \overline{\lambda}_z^2)$$

$$\Phi = 0.5 \cdot (1 + 0.21 \cdot (0.321199 - 0.2) + 0.321199^2) = 0.56431$$

where

$\alpha = 0.21$ - imperfection factor
$\overline{\lambda}_z = 0.321199$ - non-dimensional slenderness of the member for buckling

$M_{z.Ed}$ - design bending moment:

$$M_{z.Ed} = -M_{y.Ed}$$

$$M_{z.Ed} = -0.0378375 = -0.0378375 \text{ kNm}$$

where

$M_{y.Ed}$ = *0.0378375* kNm - design bending moment

$M_{b.Rd}$ - design load-bearing capacity of the element in lateral torsional buckling:

If criterion ($I_y \geq I_z$) is satisfied and
criterion ($\overline{\lambda}_{LT} > \overline{\lambda}_{LT.0}$ AND $|M_{y.Ed}|/M_{y.cr} > \overline{\lambda}_{LT.0}^2$) is not satisfied , then

$$M_{b.Rd} = W_z \cdot 10^{-3} \cdot fy/\gamma_{M1}$$

that is *criterion (1008.13 ≥ 535.651) is satisfied and*
criterion (0.0974723 > 0.4 AND |-12.0462|/5786.41 > 0.4^2) is not satisfied , then

$$M_{b.Rd} = 127.85 \cdot 10^{-3} \cdot 325/1 = 41.5513 \text{ kNm}$$

where

W_z = *127.85* cm^3 - section modulus
fy = *325* MPa - yield strength
γ_{M1} = *1* - partial safety factor in determining load-bearing capacity of element in buckling
I_y = *1008.13* cm^4 - second moment of area about y-y axis
I_z = *535.651* cm^4 - second moment of area about z-z axis
$\overline{\lambda}_{LT}$ = *0.0974723* - non-dimensional slenderness for lateral-torsional buckling in elastic stage
$\overline{\lambda}_{LT.0}$ = *0.4* - rectilinear fragment of lateral torsional buckling curve for rolled sections
$M_{y.Ed}$ = *-12.0462* kNm - design bending moment
$M_{y.cr}$ = *5786.41* kNm - elastic critical moment for lateral-torsional buckling

W_z - section modulus:

If criterion (Class = 1 OR Class = 2) is satisfied , then

$$W_z = W_{pl.z}$$

that is *criterion (1 = 1 OR 1 = 2) is satisfied , then*

$$W_z = 127.85 \text{ cm}^3$$

where

$W_{pl.z}$ = *127.85* cm^3 - plastic section modulus
Class = *1* Table 5.2 - class of cross-section

UF_w - component takes into account the reduction in load-bearing capacity of the section in case of warping:

$$UF_w = \sigma_w/(fy \cdot \gamma_{M0})$$

$$UF_w = 0/(325 \cdot 1) = 0$$

where

σ_w = *0* MPa - normal stress at point from warping
fy = *325* MPa - yield strength
γ_{M0} = *1* - partial safety factor in determining load-bearing capacity of cross-sections by strength regardless of class

σ_w - normal stress at point from warping:

$$\sigma_w = B_{w.Ed} \cdot w_i/I_w \cdot 10^5$$

$$\sigma_w = 0 \cdot -6.97863/629.682 \cdot 10^5 = 0 \text{ MPa}$$

where

$B_{w.Ed}$ = *0* kNm^2 - design balue for bimoment
w_i = *-6.97863* cm^2 - warping coordinate for the point (sign "-" for compressive stress)
I_w = *629.682* cm^6 - warping constant

Design combination of loads No. 85 :

N_{Ed}, kN	$M_{y,Ed}$, kN·m	$V_{z,Ed}$, kN	$M_{z,Ed}$, kN·m	$V_{y,Ed}$, kN	$M_{x,Ed}$, kN·m	$B_{w,Ed}$, kN·m^2	$T_{w,Ed}$, kN·m
0	-0.08426	0	1.67	0	0	0	0

$UF_{deflection}$ - utilization percentage for load-bearing capacity of structural element by deflection:

$UF_{deflection} = |\delta_y| / (L \cdot 10^3 \cdot 1/\delta_{lim}) \cdot 100$

$UF_{deflection} = |-2.90994| / (2.81299 \cdot 10^3 \cdot 0.004) \cdot 100 = 25.8616$ %

where

δ_y = *-2.90994* mm - max deflection
L = *2.81299* m - length
$1/\delta_{lim}$ = *0.004* - ultimate relative deflection

$1/\delta_{lim}$ - ultimate relative deflection:

$1/\delta_{lim} = 1/250$

$1/\delta_{lim} = 1/250 = 0.004$

Design combination of loads No. 84, combination No. 12, fundamental combination (type I) :

N_{Ed}, kN	$M_{y,Ed}$, kN·m	$V_{z,Ed}$, kN	$M_{z,Ed}$, kN·m	$V_{y,Ed}$, kN	$M_{x,Ed}$, kN·m	$B_{w,Ed}$, kN·m^2	$T_{w,Ed}$, kN·m
-7.39	0	0	-20.17	14.6	0	0	0

$UF_{l.b.web}$ - utilization percentage for load-bearing capacity of structural element in local buckling of web:

$UF_{l.b.web} = UF_{l.b.}$

$UF_{l.b.web} = 13.1966$ %

where

$UF_{l.b.}$ = *13.1966* % - local buckling

$UF_{l.b.}$ - local buckling:

If criterion ($\Psi > -1$) is satisfied , then

$UF_{l.b.} = d/t_w / (42 \cdot \varepsilon / (0.67 + 0.33 \cdot \Psi)) \cdot 100$

that is *criterion (0.99472 > -1) is satisfied , then*

$UF_{l.b.} = 9.5 / (42 \cdot 1.71102 / (0.67 + 0.33 \cdot 0.99472)) \cdot 100 = 13.1966$ %

where

d/t_w = *9.5* - width-to-thickness ratios
ε = *1.71102* - coefficient depending on $\sigma_{com.Ed}$
Ψ = *0.99472* Table 5.2 - ratio of stresses

Ψ - ratio of stresses:

$\Psi = \sigma_2/\sigma_1$

$\Psi = 79.8472/80.2711 = 0.99472$ Table 5.2

where

$\sigma_2 = 79.8472$ MPa - design normal stress (compressive stress is positive)
$\sigma_1 = 80.2711$ MPa - design normal stress (compressive stress is positive)

d/t_w - width-to-thickness ratios:

$d/t_w = (b - 3 \cdot t)/t$

$d/t_w = (10 - 3 \cdot 0.8)/0.8 = 9.5$

where

$b = 10$ cm - short leg of angle
$t = 0.8$ cm - plate thickness

b - short leg of angle:

$b = B_f$

$b = 10$ cm

where

$B_f = 10$ cm - flange width

t - plate thickness:

$t = T_f$

$t = 0.8$ cm

where

$T_f = 0.8$ cm - flange thickness

ε - coefficient depending on $\sigma_{com.Ed}$:

$\varepsilon = (235/\sigma_{com.Ed})^{1/2}$

$\varepsilon = (235/80.2711)^{1/2} = 1.71102$

where

$\sigma_{com.Ed} = 80.2711$ MPa - max design compressive stress in element

Design combination of loads No. 84, combination No. 12, fundamental combination (type I) :

N_{Ed}, kN	$M_{y,Ed}$, kN·m	$V_{z,Ed}$, kN	$M_{z,Ed}$, kN·m	$V_{y,Ed}$, kN	$M_{x,Ed}$, kN·m	$B_{w,Ed}$, kN·m^2	$T_{w,Ed}$, kN·m
-7.39	0	0	-20.17	14.6	0	0	0

$UF_{l.b.flange}$ - utilization percentage for load-bearing capacity of structural element in local buckling of flange:

$UF_{l.b.flange} = UF_{l.b.}$

$UF_{l.b.flange} = 13.1966$ %

where

$UF_{l.b.} = 13.1966$ % - local buckling

Design combination of loads No. 51, combination No. 3, fundamental combination (type I) :

N_{Ed}, kN	$M_{y,Ed}$, kN·m	$V_{z,Ed}$, kN	$M_{z,Ed}$, kN·m	$V_{y,Ed}$, kN	$M_{x,Ed}$, kN·m	$B_{w,Ed}$, kN·m^2	$T_{w,Ed}$, kN·m
-5.18	0	0	-11.86	14.25	0	0	0

UF_{ULS} - utilization percentage for load-bearing capacity of structural element by ultimate limit state:

$$UF_{ULS} = UF_{bending}$$

$$UF_{ULS} = 21.5672\ \%$$

where

$UF_{bending} = 21.5672\ \%$ - utilization percentage for load-bearing capacity of structural element in bending

Design combination of loads No. 85 :

N_{Ed}, kN	$M_{y,Ed}$, kN·m	$V_{z,Ed}$, kN	$M_{z,Ed}$, kN·m	$V_{y,Ed}$, kN	$M_{x,Ed}$, kN·m	$B_{w,Ed}$, kN·m^2	$T_{w,Ed}$, kN·m
0	-0.08426	0	1.67	0	0	0	0

UF_{SLS} - utilization percentage for load-bearing capacity of structural element by serviceability limit state:

$$UF_{SLS} = UF_{deflection}$$

$$UF_{SLS} = 25.8616\ \%$$

where

$UF_{deflection} = 25.8616\ \%$ - utilization percentage for load-bearing capacity of structural element by deflection

Design combination of loads No. 84, combination No. 12, fundamental combination (type I) :

N_{Ed}, kN	$M_{y,Ed}$, kN·m	$V_{z,Ed}$, kN	$M_{z,Ed}$, kN·m	$V_{y,Ed}$, kN	$M_{x,Ed}$, kN·m	$B_{w,Ed}$, kN·m^2	$T_{w,Ed}$, kN·m
-7.39	0	0	-20.17	14.6	0	0	0

$UF_{L.B.}$ - utilization percentage for load-bearing capacity of structural element in local buckling:

$$UF_{L.B.} = UF_{l.b.flange}$$

$$UF_{L.B.} = 13.1966\ \%$$

where

$UF_{l.b.flange} = 13.1966\ \%$ - utilization percentage for load-bearing capacity of structural element in local buckling of flange

Design combination of loads No. 49, combination No. 1, fundamental combination (type I) :

N_{Ed}, kN	$M_{y,Ed}$, kN·m	$V_{z,Ed}$, kN	$M_{z,Ed}$, kN·m	$V_{y,Ed}$, kN	$M_{x,Ed}$, kN·m	$B_{w,Ed}$, kN·m^2	$T_{w,Ed}$, kN·m
-4.688	0.03784	0.07859	-12.05	14.31	-0.003682	0	0

$T_{cr} = 747^{o}C$ - critical temperature for element of steel structure :

Buckling resistance of a member in bending				
$\theta_{cr,}\ ^{o}C$	$k_{y,\theta}$	$\gamma_{M,fi}$	$\gamma_{M,0}$	$\frac{M_{y,fi,Ed}}{M_{y,fi,\theta,Rd}} + \frac{M_{z,fi,Ed}}{M_{z,fi,\theta,Rd}} \leq 1$
100	1	1	1	0.143134
200	1	1	1	0.143134
300	1	1	1	0.143134
400	1	1	1	0.143134
500	0.78	1	1	0.183505
600	0.47	1	1	0.30454
700	0.23	1	1	0.62232
800	0.11	1	1	1.30122
900	0.06	1	1	2.38556
1000	0.04	1	1	3.57834
1100	0.02	1	1	7.15669
Critical temperature due to bending, ° C				755.632

Buckling of a member in one-plane bending								
$\theta_{cr,}\ ^{o}C$	$k_{y,\theta}$	$k_{E,\theta}$	$\gamma_{M,fi}$	$\gamma_{M,0}$	$\lambda_{LT,\theta}$	φ_{θ}	$X_{LT,fi}$	$\frac{M_{y,fi,Ed}}{M_{b,fi,\theta,Rd}} + \frac{M_{z,fi,Ed}}{M_{b,fi,\theta,Rd}} \leq 1$
100	1	1	1	1	0.0974723	0.531688	0.948438	0.150895
200	1	0.9	1	1	0.102745	0.533673	0.94575	0.151323
300	1	0.8	1	1	0.108977	0.536055	0.942582	0.151831
400	1	0.7	1	1	0.116502	0.538983	0.93877	0.152446
500	0.78	0.6	1	1	0.111136	0.536889	0.941487	0.194881
600	0.47	0.31	1	1	0.120019	0.540371	0.936992	0.324966
700	0.23	0.13	1	1	0.12965	0.544235	0.932139	0.667511
800	0.11	0.09	1	1	0.10776	0.535587	0.9432	1.37938
900	0.06	0.0675	1	1	0.0918978	0.529619	0.951289	2.50741
1000	0.04	0.045	1	1	0.0918978	0.529619	0.951289	3.76111
1100	0.02	0.0225	1	1	0.0918978	0.529619	0.951289	7.52222
Critical temperature due to buckling, ° C								746.707

Critical temperature, ° C	746.707

Shear resistance				
$\theta_{cr,}\ ^{o}C$	$k_{y,\theta}$	$\gamma_{M,0}$	$\gamma_{M,fi}$	$\frac{V_{fi,Ed}}{V_{fi,\theta,Rd}} \leq 1$
100	1	1	1	0.0242744
200	1	1	1	0.0242744
300	1	1	1	0.0242744
400	1	1	1	0.0242744
500	0.78	1	1	0.031121
600	0.47	1	1	0.0516476
700	0.23	1	1	0.105541
800	0.11	1	1	0.220676
900	0.06	1	1	0.404573
1000	0.04	1	1	0.60686

1100	0.02	1	1	1.21372
Critical temperature, ° C				1064.78

The influence of Mx force on fire analysis is not considered.

Class - the highest class of cross-section determined in computation of cross-section:

$Class = Class_{out.el.}$

$Class = 1 = 1$ Table 5.2

where

$Class_{out.el.} = 1$ Table 5.2

$Class_{out.el.}$ - the highest class of outstand elements:

If criterion ($\sigma_1 \leq 0$ AND $\sigma_2 \leq 0$) is satisfied , then

that is *criterion (-40.4893 ≤ 0 AND -40.5004 ≤ 0) is satisfied* , then

$Class_{out.el.} = 1$ Table 5.2

where

$\sigma_1 = -40.4893$ MPa - design normal stress (compressive stress is positive)
$\sigma_2 = -40.5004$ MPa - design normal stress (compressive stress is positive)

Design combination of loads No. 40, combination No. 4, fundamental combination (type I) :

N_{Ed}, kN	$M_{y,Ed}$, kN·m	$V_{z,Ed}$, kN	$M_{z,Ed}$, kN·m	$V_{y,Ed}$, kN	$M_{x,Ed}$, kN·m	$B_{w,Ed}$, kN·m^2	$T_{w,Ed}$, kN·m
-6.436	0	0	-5.957	10.13	0	0	0

$UF_{bending}$ - utilization percentage for load-bearing capacity of structural element in bending:

$UF_{bending} = |(-1 \cdot UF_{bending.y} + 0 \cdot UF_{bending.z} + UF_w)| \cdot 100$

$UF_{bending} = |(-1 \cdot 0.10835 + 0 \cdot 0 + 0)| \cdot 100 = 10.835$ %

where

$UF_{bending.y} = 0.10835$ %/100% - utilization fraction for load-bearing capacity of the structural element in bending
$UF_{bending.z} = 0$ %/100% - utilization fraction for load-bearing capacity of the structural element in bending
$UF_w = 0$ - component takes into account the reduction in load-bearing capacity of the section in case of warping

$UF_{bending.y}$ - utilization fraction for load-bearing capacity of the structural element in bending:

$UF_{bending.y} = |M_{y.Ed}| / (W_{pl.y} \cdot fy \cdot 10^{-3} / \gamma_{M0}) + \rho_z$

$UF_{bending.y} = |-5.95665| / (169.156 \cdot 325 \cdot 10^{-3} / 1) + 0 = 0.10835$ %/100%

where

$M_{y.Ed} = -5.95665$ kNm - design bending moment
$W_{pl.y} = 169.156$ cm^3 - plastic section modulus
$fy = 325$ MPa - yield strength
$\gamma_{M0} = 1$ - partial safety factor in determining load-bearing capacity of cross-sections by strength regardless of class
$\rho_z = 0$ - reduction factor to determine reduced design value of the resistance to bending moment making allowance of the presence of shear force

$UF_{bending.z}$ - utilization fraction for load-bearing capacity of the structural element in bending:

$$UF_{bending.z} = |M_{z.Ed}|/(W_{pl.z} \cdot fy \cdot 10^{-3}/\gamma_{M0}) + \rho_y$$

$$UF_{bending.z} = |0|/(127.85 \cdot 325 \cdot 10^{-3}/1) + 0 = 0 \ \%/100\%$$

where

$M_{z.Ed} = 0$ kNm - design bending moment
$W_{pl.z} = 127.85$ cm^3 - plastic section modulus
$fy = 325$ MPa - yield strength
$\gamma_{M0} = 1$ - partial safety factor in determining load-bearing capacity of cross-sections by strength regardless of class
$\rho_y = 0$ - reduction factor to determine reduced design value of the resistance to bending moment making allowance of the presence of shear force

$M_{z.Ed}$ - design bending moment:

$$M_{z.Ed} = -M_{y.Ed}$$

$$M_{z.Ed} = -0 = 0 \text{ kNm}$$

where

$M_{y.Ed} = 0$ kNm - design bending moment

UF_w - component takes into account the reduction in load-bearing capacity of the section in case of warping:

$$UF_w = \sigma_w/(fy \cdot \gamma_{M0})$$

$$UF_w = 0/(325 \cdot 1) = 0$$

where

$\sigma_w = 0$ MPa - normal stress at point from warping
$fy = 325$ MPa - yield strength
$\gamma_{M0} = 1$ - partial safety factor in determining load-bearing capacity of cross-sections by strength regardless of class

σ_w - normal stress at point from warping:

$$\sigma_w = B_{w.Ed} \cdot w_i/I_w \cdot 10^5$$

$$\sigma_w = 0 \cdot 6.97863/629.682 \cdot 10^5 = 0 \text{ MPa}$$

where

$B_{w.Ed} = 0$ kNm^2 - design balue for bimoment
$w_i = 6.97863$ cm^2 - warping coordinate for the point (sign "-" for compressive stress)
$I_w = 629.682$ cm^6 - warping constant

Design combination of loads No. 37, combination No. 1, fundamental combination (type I) :

N_{Ed}, kN	$M_{y,Ed}$, kN·m	$V_{z,Ed}$, kN	$M_{z,Ed}$, kN·m	$V_{y,Ed}$, kN	$M_{x,Ed}$, kN·m	$B_{w,Ed}$, $kN \cdot m^2$	$T_{w,Ed}$, kN·m
-4.303	0.000993	0.07859	-6.093	10.32	-0.003682	0	0

UF_{shear} - utilization percentage for load-bearing capacity of structural element in shear:

If criterion (Class = 3 OR Class = 4) is not satisfied , then

$$UF_{shear} = UF_{shear.z}$$

that is *criterion (1 = 3 OR 1 = 4) is not satisfied* , then

UF_{shear} = *2.66588* %

where

$UF_{shear.z}$ = *2.66588* % - utilization percentage for load-bearing capacity of structural element in shear
Class = *1* Table 5.2 - class of cross-section

Class - class of cross-section:

Class = $Class_{out.el.}$

Class = *1* = *1* Table 5.2

where

$Class_{out.el.}$ = *1* Table 5.2

$UF_{shear.z}$ - utilization percentage for load-bearing capacity of structural element in shear:

$UF_{shear.z} = |V_{z.Ed}|/V_{pl.z.Rd} \cdot 100$

$UF_{shear.z}$ = *|-10.3193|/387.088·100 = 2.66588* %

where

$V_{z.Ed}$ = *-10.3193* kN - design shear force
$V_{pl.z.Rd}$ = *387.088* kN - design load-bearing capacity of the cross-section in shear for plastic analysis

$V_{z.Ed}$ - design shear force:

$V_{z.Ed} = -V_{y.Ed}$

$V_{z.Ed}$ = *-10.3193* = *-10.3193* kN

where

$V_{y.Ed}$ = *10.3193* kN - design shear force

$V_{pl.z.Rd}$ - design load-bearing capacity of the cross-section in shear for plastic analysis:

$V_{pl.z.Rd} = V_{pl.T.z.Rd}$

$V_{pl.z.Rd}$ = *387.088* kN

where

$V_{pl.T.z.Rd}$ = *387.088* kN - reduced design load-bending capacity of cross-section in shear for the plastic analysis with account of torsion

$V_{pl.T.z.Rd}$ - reduced design load-bending capacity of cross-section in shear for the plastic analysis with account of torsion:

$V_{pl.T.z.Rd} = V_{pl.z.Rd} \cdot (1 - \tau_{t.Ed}/(fy/3^{½}/\gamma_{M0}))^{½}$

$V_{pl.T.z.Rd}$ = *387.106·(1 - 0.0176164/(325/3^{½}/1))^{½} = 387.088* kN

where

$V_{pl.z.Rd}$ = *387.106* kN - design load-bearing capacity of the cross-section in shear for plastic analysis
$\tau_{t.Ed}$ = *0.0176164* MPa - design shear stress caused by torsional moment
fy = *325* MPa - yield strength
γ_{M0} = *1* - partial safety factor in determining load-bearing capacity of cross-sections by strength regardless of class

$V_{pl.z.Rd}$ - design load-bearing capacity of the cross-section in shear for plastic analysis:

$$V_{pl.z.Rd} = A_{v.z} \cdot fy \cdot 10^{-1} / (3^{1/2} \cdot \gamma_{M0})$$

$$V_{pl.z.Rd} = 20.6304 \cdot 325 \cdot 10^{-1} / (3^{1/2} \cdot 1) = 387.106 \text{ kN}$$

where

$A_{v.z} = 20.6304$ cm^2 - shear area of the cross-section along the local axis Z1*
$fy = 325$ MPa - yield strength
$\gamma_{M0} = 1$ - partial safety factor in determining load-bearing capacity of cross-sections by strength regardless of class

$\tau_{t.Ed}$ - design shear stress caused by torsional moment:

$$\tau_{t.Ed} = |\tau_{t.Ed}|$$

$$\tau_{t.Ed} = |0.0176164| = 0.0176164 \text{ MPa}$$

where

$\tau_{t.Ed} = 0.0176164$ MPa - design shear stress caused by torsional moment

$\tau_{t.Ed}$ - design shear stress caused by torsional moment:

$$\tau_{t.Ed} = |M_{x.Ed}| \cdot 10^3 / W_f$$

$$\tau_{t.Ed} = |-0.00368224| \cdot 10^3 / 209.024 = 0.0176164 \text{ MPa}$$

where

$M_{x.Ed} = -0.00368224$ kNm - design torsion moment
$W_f = 209.024$ cm^3 - torsional section modulus for flange

Design combination of loads No. 41, combination No. 5, fundamental combination (type I) :

N_{Ed}, kN	$M_{y,Ed}$, kN·m	$V_{z,Ed}$, kN	$M_{z,Ed}$, kN·m	$V_{y,Ed}$, kN	$M_{x,Ed}$, kN·m	$B_{w,Ed}$, kN·m^2	$T_{w,Ed}$, kN·m
-3.123	0.001655	0.131	-4.72	7.543	-0.006137	0	0

$UF_{torsion}$ - utilization percentage for load-bearing capacity of structural element in torsion:

$$UF_{torsion} = (\tau_{t.Ed} + \tau_{w.Ed}) / (fy / 3^{1/2} / \gamma_{M0}) \cdot 100$$

$$UF_{torsion} = (0.0293604 + 0) / (325 / 3^{1/2} / 1) \cdot 100 = 0.0156473 \text{ \%}$$

where

$\tau_{t.Ed} = 0.0293604$ MPa - design shear stress caused by torsional moment
$\tau_{w.Ed} = 0$ MPa - design shear stress in warping torsion
$fy = 325$ MPa - yield strength
$\gamma_{M0} = 1$ - partial safety factor in determining load-bearing capacity of cross-sections by strength regardless of class

$\tau_{t.Ed}$ - design shear stress caused by torsional moment:

$$\tau_{t.Ed} = |\tau_{t.Ed}|$$

$$\tau_{t.Ed} = |0.0293604| = 0.0293604 \text{ MPa}$$

where

$\tau_{t.Ed} = 0.0293604$ MPa - design shear stress caused by torsional moment

$\tau_{t.Ed}$ - design shear stress caused by torsional moment:

$$\tau_{t.Ed} = |M_{x.Ed}| \cdot 10^3 / W_f$$

$$\tau_{t.Ed} = |-0.00613703| \cdot 10^3 / 209.024 = 0.0293604 \text{ MPa}$$

where

$M_{x.Ed} = -0.00613703$ kNm - design torsion moment
$W_f = 209.024$ cm^3 - torsional section modulus for flange

$\tau_{w.Ed}$ - design shear stress in warping torsion:

$$\tau_{w.Ed} = |\tau_{w.Ed}|$$

$$\tau_{w.Ed} = |0| = 0 \text{ MPa}$$

where

$\tau_{w.Ed} = 0$ MPa - design shear stress in warping torsion

Design combination of loads No. 37, combination No. 1, fundamental combination (type I) :

N_{Ed}, kN	$M_{y,Ed}$, kN·m	$V_{z,Ed}$, kN	$M_{z,Ed}$, kN·m	$V_{y,Ed}$, kN	$M_{x,Ed}$, kN·m	$B_{w,Ed}$, kN·m^2	$T_{w,Ed}$, kN·m
-4.303	0.000993	0.07859	-6.093	10.32	-0.003682	0	0

$UF_{buckling}$ - utilization percentage for load-bearing capacity of structural element by overall stability:

$$UF_{buckling} = UF_{buckl.about\ Z1}$$

$$UF_{buckling} = 8.2645 \%$$

where

$UF_{buckl.about\ Z1} = 8.2645$ % - utilization percentage for load-bearing capacity of structural element for buckling relative to local axis Z1

$UF_{buckl.about\ Z1}$ - utilization percentage for load-bearing capacity of structural element for buckling relative to local axis Z1:

$$UF_{buckl.about\ Z1} = UF_{buckl.about\ Y1}$$

$$UF_{buckl.about\ Z1} = 8.2645 \%$$

where

$UF_{buckl.about\ Y1} = 8.2645$ % - utilization percentage for load-bearing capacity of structural element for buckling relative to local axis Y1*

$UF_{buckl.about\ Y1}$ - utilization percentage for load-bearing capacity of structural element for buckling relative to local axis Y1*:

If criterion ($I_y \geq I_z$) is satisfied and
criterion ($\overline{\lambda}_{LT} > \overline{\lambda}_{LT.0}$ AND $|M_{y.Ed}|/M_{y.cr} > \overline{\lambda}_{LT.0}^2$) is not satisfied , then

$$UF_{buckl.about\ Y1} = ((-k_{yy}) \cdot M_{y.Ed}/M_{b.Rd} - k_{yz} \cdot M_{z.Ed}/M_{b.Rd} - UF_w) \cdot 100$$

that is *criterion (1008.13 ≥ 535.651) is satisfied and*
criterion (0.0974723 > 0.4 AND |-6.09313|/5786.41 > 0.4^2) is not satisfied , then

$$UF_{buckl.about\ Y1} = ((-0.745576) \cdot -6.09313/54.9758 - 0.441425 \cdot -0.000993031/41.5513 - 0) \cdot 100 = 8.2645 \%$$

where

k_{yy} = *0.745576* - interaction factors
$M_{y.Ed}$ = *-6.09313* kNm - design bending moment
$M_{b.Rd}$ = *54.9758* kNm - design load-bearing capacity of the element in lateral torsional buckling
k_{yz} = *0.441425* - interaction factors
$M_{z.Ed}$ = *-0.000993031* kNm - design bending moment
$M_{b.Rd}$ = *41.5513* kNm - design load-bearing capacity of the element in lateral torsional buckling
UF_w = *0* - component takes into account the reduction in load-bearing capacity of the section in case of warping
I_y = *1008.13* cm^4 - second moment of area about y-y axis
I_z = *535.651* cm^4 - second moment of area about z-z axis
$\overline{\lambda}_{LT}$ = *0.0974723* - non-dimensional slenderness for lateral-torsional buckling in elastic stage
$\overline{\lambda}_{LT.0}$ = *0.4* - rectilinear fragment of lateral torsional buckling curve for rolled sections
$M_{y.cr}$ = *5786.41* kNm - elastic critical moment for lateral-torsional buckling

$\overline{\lambda}_{LT}$ - non-dimensional slenderness for lateral-torsional buckling in elastic stage:

$$\overline{\lambda}_{LT} = (W_y \cdot fy \cdot 10^{-3}/M_{y.cr})^{½}$$

$$\overline{\lambda}_{LT} = (169.156 \cdot 325 \cdot 10^{-3}/5786.41)^{½} = 0.0974723$$

where

W_y = *169.156* cm^3 - section modulus
fy = *325* MPa - yield strength
$M_{y.cr}$ = *5786.41* kNm - elastic critical moment for lateral-torsional buckling

W_y - section modulus:

If criterion (Class = 1 OR Class = 2) is satisfied , then

$$W_y = W_{pl.y}$$

that is *criterion (1 = 1 OR 1 = 2) is satisfied , then*

$$W_y = 169.156 \text{ cm}^3$$

where

$W_{pl.y}$ = *169.156* cm^3 - plastic section modulus
Class = *1* Table 5.2 - class of cross-section

$M_{y.cr}$ - elastic critical moment for lateral-torsional buckling:

$$M_{y.cr} = C_1 \cdot \Pi^2 \cdot E \cdot I_z \cdot 10^{-8}/L_z^2 \cdot ((k_z^2/kw^2 \cdot I_w \cdot 10^{-12}/(I_z \cdot 10^{-8}) + L_z^2 \cdot G \cdot I_t \cdot 10^{-8}/(3.14159^2 \cdot E \cdot I_z \cdot 10^{-8}) + (C_2 \cdot z_g \cdot 10^{-2} - C_3 \cdot z_j \cdot 10^{-2}) \cdot (C_2 \cdot z_g \cdot 10^{-2} - C_3 \cdot z_j \cdot 10^{-2}))^{½} - (C_2 \cdot z_g \cdot 10^{-2} - C_3 \cdot z_j \cdot 10^{-2})) \cdot 10^3$$

$$M_{y.cr} = 2.57 \cdot 3.14159^2 \cdot 210000 \cdot 535.651 \cdot 10^{-8}/1^2 \cdot ((1^2/1^2 \cdot 629.682 \cdot 10^{-12}/(535.651 \cdot 10^{-8}) + 1^2 \cdot 81000 \cdot 1208.38 \cdot 10^{-8}/(3.14159^2 \cdot 210000 \cdot 535.651 \cdot 10^{-8}) + (1.55 \cdot 7.5 \cdot 10^{-2} - 0.75 \cdot 0 \cdot 10^{-2}) \cdot (1.55 \cdot 7.5 \cdot 10^{-2} - 0.75 \cdot 0 \cdot 10^{-2}))^{½} - (1.55 \cdot 7.5 \cdot 10^{-2} - 0.75 \cdot 0 \cdot 10^{-2})) \cdot 10^3 = 5786.41 \text{ kNm}$$

where

C_1 = *2.57* - factor
Π = *3.14159* - mathematical constant
E = *210000* MPa - modulus of elasticity
I_z = *535.651* cm^4 - second moment of area about z-z axis
L_z = *1* m - buckling length
k_z = *1* - factor for considering type of restraints at the end of the element from rotation about axis Z1-Z1*
kw = *1* - effective length factor for warping
I_w = *629.682* cm^6 - warping constant
G = *81000* MPa - shear modulus

I_t = *1208.38* cm^4 - torsional constant
C_2 = *1.55* - factor
z_g = *7.5* cm - coordinate of the point where external load is applied to relative to the shear (flexural) centre of the section
C_3 = *0.75* - factor
z_j = *0* cm - monosymmetry parameter

k_{yy} - interaction factors:

If criterion (Class = 3 OR Class = 4) is not satisfied , then

$$k_{yy} = C_{my} \cdot (1 + (\overline{\lambda}_y - 0.2) \cdot |N_{Ed}| / (\chi_y \cdot N_{Rk} / \gamma_{M1}))$$

that is *criterion (1 = 3 OR 1 = 4) is not satisfied , then*

$$k_{yy} = 0.745576 \cdot (1 + (0.117065 - 0.2) \cdot |0| / (1 \cdot 1145.38 / 1)) = 0.745576$$

where

C_{my} = *0.745576* - factor
$\overline{\lambda}_y$ = *0.117065* - non-dimensional slenderness of the member for buckling
N_{Ed} = *0* kN - design axial force
χ_y = *1* - reduction factor for the buckling mode corresponding to the buckling curve, about Y1-Y1*
N_{Rk} = *1145.38* kN - characteristic value for load-bearing capacity in compression
γ_{M1} = *1* - partial safety factor in determining load-bearing capacity of element in buckling
Class = *1* Table 5.2 - class of cross-section

Class - class of cross-section:

$$Class = Class_{out.el.}$$

Class = *1* = *1* Table 5.2

where

$Class_{out.el.}$ = *1* Table 5.2

C_{my} - factor:

$$C_{my} = 0.2 + 0.8 \cdot \alpha_s$$

$$C_{my} = 0.2 + 0.8 \cdot 0.681971 = 0.745576$$

where

α_s = *0.681971* - factor

$\overline{\lambda}_y$ - non-dimensional slenderness of the member for buckling:

$$\overline{\lambda}_y = (fy \cdot A \cdot 10^{-1} / N_{cr})^{1/2}$$

$$\overline{\lambda}_y = (325 \cdot 35.2425 \cdot 10^{-1} / 83578.4)^{1/2} = 0.117065$$

where

fy = *325* MPa - yield strength
A = *35.2425* cm^2 - area of gross cross-section
N_{cr} = *83578.4* kN - elastic critical force for the relevant buckling mode

N_{Rk} - characteristic value for load-bearing capacity in compression:

$$N_{Rk} = fy \cdot A \cdot 10^{-1}$$

$$N_{Rk} = 325 \cdot 35.2425 \cdot 10^{-1} = 1145.38 \text{ kN}$$

where

f_y = *325* MPa - yield strength
A = *35.2425* cm^2 - area of gross cross-section

$M_{b.Rd}$ - design load-bearing capacity of the element in lateral torsional buckling:

If criterion ($I_y \geq I_z$) is satisfied and
criterion ($\overline{\lambda}_{LT} > \overline{\lambda}_{LT.0}$ AND $|M_{y.Ed}|/M_{y.cr} > \overline{\lambda}_{LT.0}^2$) is not satisfied , then

$$M_{b.Rd} = W_y \cdot 10^{-3} \cdot f_y / \gamma_{M1}$$

that is *criterion (1008.13 ≥ 535.651) is satisfied and*
criterion (0.0974723 > 0.4 AND |-6.09313|/5786.41 > 0.4^2) is not satisfied , then

$$M_{b.Rd} = 169.156 \cdot 10^{-3} \cdot 325/1 = 54.9758 \text{ kNm}$$

where

W_y = *169.156* cm^3 - section modulus
f_y = *325* MPa - yield strength
γ_{M1} = *1* - partial safety factor in determining load-bearing capacity of element in buckling
I_y = *1008.13* cm^4 - second moment of area about y-y axis
I_z = *535.651* cm^4 - second moment of area about z-z axis
$\overline{\lambda}_{LT}$ = *0.0974723* - non-dimensional slenderness for lateral-torsional buckling in elastic stage
$\overline{\lambda}_{LT.0}$ = *0.4* - rectilinear fragment of lateral torsional buckling curve for rolled sections
$M_{y.Ed}$ = *-6.09313* kNm - design bending moment
$M_{y.cr}$ = *5786.41* kNm - elastic critical moment for lateral-torsional buckling

k_{yz} - interaction factors:

If criterion (Class = 3 OR Class = 4) is not satisfied , then

$$k_{yz} = 0.6 \cdot k_{zz}$$

that is *criterion (1 = 3 OR 1 = 4) is not satisfied , then*

$$k_{yz} = 0.6 \cdot 0.735708 = 0.441425$$

where

k_{zz} = *0.735708* - interaction factors
Class = *1* Table 5.2 - class of cross-section

k_{zz} - interaction factors:

$$k_{zz} = C_{mz} \cdot (1 + (\overline{\lambda}_z - 0.2) \cdot |N_{Ed}| / (\chi_z \cdot N_{Rk} / \gamma_{M1}))$$

$$k_{zz} = 0.735708 \cdot (1 + (0.321199 - 0.2) \cdot |0| / (0.972488 \cdot 1145.38/1)) = 0.735708$$

where

C_{mz} = *0.735708* - factor
$\overline{\lambda}_z$ = *0.321199* - non-dimensional slenderness of the member for buckling
N_{Ed} = *0* kN - design axial force
χ_z = *0.972488* - reduction factor for the buckling mode corresponding to the buckling curve, about Z1-Z1*
N_{Rk} = *1145.38* kN - characteristic value for load-bearing capacity in compression
γ_{M1} = *1* - partial safety factor in determining load-bearing capacity of element in buckling

C_{mz} - factor:

$$C_{mz} = 0.2 + 0.8 \cdot \alpha_s$$

$$C_{mz} = 0.2 + 0.8 \cdot 0.669635 = 0.735708$$

where

α_s = *0.669635* - factor

$\overline{\lambda}_z$ - non-dimensional slenderness of the member for buckling:

$$\overline{\lambda}_z = (fy \cdot A \cdot 10^{-1}/N_{cr})^{1/2}$$

$$\overline{\lambda}_z = (325 \cdot 35.2425 \cdot 10^{-1}/11102)^{1/2} = 0.321199$$

where

fy = *325* MPa - yield strength
A = *35.2425* cm^2 - area of gross cross-section
N_{cr} = *11102* kN - elastic critical force for the relevant buckling mode

χ_z - reduction factor for the buckling mode corresponding to the buckling curve, about Z1-Z1*:

$$\chi_z = 1/(\Phi + (\Phi^2 - \overline{\lambda}_z^2)^{1/2})$$

$$\chi_z = 1/(0.56431 + (0.56431^2 - 0.321199^2)^{1/2}) = 0.972488$$

where

Φ = *0.56431* - value to determine the reduction factor χ
$\overline{\lambda}_z$ = *0.321199* - non-dimensional slenderness of the member for buckling

Φ - value to determine the reduction factor χ:

$$\Phi = 0.5 \cdot (1 + \alpha \cdot (\overline{\lambda}_z - 0.2) + \overline{\lambda}_z^2)$$

$$\Phi = 0.5 \cdot (1 + 0.21 \cdot (0.321199 - 0.2) + 0.321199^2) = 0.56431$$

where

α = *0.21* - imperfection factor
$\overline{\lambda}_z$ = *0.321199* - non-dimensional slenderness of the member for buckling

$M_{z.Ed}$ - design bending moment:

$$M_{z.Ed} = -M_{y.Ed}$$

$$M_{z.Ed} = -0.000993031 = -0.000993031 \text{ kNm}$$

where

$M_{y.Ed}$ = *0.000993031* kNm - design bending moment

$M_{b.Rd}$ - design load-bearing capacity of the element in lateral torsional buckling:

If criterion ($I_y \geq I_z$) is satisfied and
criterion ($\overline{\lambda}_{LT} > \overline{\lambda}_{LT.0}$ AND $|M_{y.Ed}|/M_{y.cr} > \overline{\lambda}_{LT.0}^2$) is not satisfied , then

$$M_{b.Rd} = W_z \cdot 10^{-3} \cdot fy/\gamma_{M1}$$

that is *criterion (1008.13 ≥ 535.651) is satisfied and*
criterion (0.0974723 > 0.4 AND |-6.09313|/5786.41 > 0.4^2) is not satisfied , then

$$M_{b.Rd} = 127.85 \cdot 10^{-3} \cdot 325/1 = 41.5513 \text{ kNm}$$

where

W_z = *127.85* cm^3 - section modulus
fy = *325* MPa - yield strength
γ_{M1} = *1* - partial safety factor in determining load-bearing capacity of element in buckling

I_y = *1008.13* cm^4 - second moment of area about y-y axis
I_z = *535.651* cm^4 - second moment of area about z-z axis
$\overline{\lambda}_{LT}$ = *0.0974723* - non-dimensional slenderness for lateral-torsional buckling in elastic stage
$\overline{\lambda}_{LT.0}$ = *0.4* - rectilinear fragment of lateral torsional buckling curve for rolled sections
$M_{y.Ed}$ = *-6.09313* kNm - design bending moment
$M_{y.cr}$ = *5786.41* kNm - elastic critical moment for lateral-torsional buckling

W_z - section modulus:

If criterion (Class = 1 OR Class = 2) is satisfied , then

$$W_z = W_{pl.z}$$

that is *criterion (1 = 1 OR 1 = 2) is satisfied , then*

$$W_z = 127.85\ cm^3$$

where

$W_{pl.z}$ = *127.85* cm^3 - plastic section modulus
Class = *1* Table 5.2 - class of cross-section

UF_w - component takes into account the reduction in load-bearing capacity of the section in case of warping:

$$UF_w = \sigma_w/(fy \cdot \gamma_{M0})$$

$$UF_w = 0/(325 \cdot 1) = 0$$

where

σ_w = *0* MPa - normal stress at point from warping
fy = *325* MPa - yield strength
γ_{M0} = *1* - partial safety factor in determining load-bearing capacity of cross-sections by strength regardless of class

σ_w - normal stress at point from warping:

$$\sigma_w = B_{w.Ed} \cdot w_i/I_w \cdot 10^5$$

$$\sigma_w = 0 \cdot -6.97863/629.682 \cdot 10^5 = 0\ MPa$$

where

$B_{w.Ed}$ = *0* kNm^2 - design balue for bimoment
w_i = *-6.97863* cm^2 - warping coordinate for the point (sign "-" for compressive stress)
I_w = *629.682* cm^6 - warping constant

Design combination of loads No. 85 :

N_{Ed}, kN	$M_{y,Ed}$, kN·m	$V_{z,Ed}$, kN	$M_{z,Ed}$, kN·m	$V_{y,Ed}$, kN	$M_{x,Ed}$, kN·m	$B_{w,Ed}$, kN·m^2	$T_{w,Ed}$, kN·m
0	-0.08426	0	1.67	0	0	0	0

$UF_{deflection}$ - utilization percentage for load-bearing capacity of structural element by deflection:

$$UF_{deflection} = |\delta_y|/(L \cdot 10^3 \cdot 1/\delta_{lim}) \cdot 100$$

$$UF_{deflection} = |-2.60939|/(2.81299 \cdot 10^3 \cdot 0.004) \cdot 100 = 23.1906\ \%$$

where

δ_y = *-2.60939* mm - max deflection
L = *2.81299* m - length
$1/\delta_{lim}$ = *0.004* - ultimate relative deflection

$1/\delta_{lim}$ - ultimate relative deflection:

$1/\delta_{lim}$ = 1/250

$1/\delta_{lim}$ = *1/250 = 0.004*

Design combination of loads No. 84, combination No. 12, fundamental combination (type I) :

N_{Ed}, kN	$M_{y,Ed}$, kN·m	$V_{z,Ed}$, kN	$M_{z,Ed}$, kN·m	$V_{y,Ed}$, kN	$M_{x,Ed}$, kN·m	$B_{w,Ed}$, kN·m^2	$T_{w,Ed}$, kN·m
-7.39	0	0	-20.17	14.6	0	0	0

$UF_{l.b.web}$ - utilization percentage for load-bearing capacity of structural element in local buckling of web:

$UF_{l.b.web}$ = $UF_{l.b.}$

$UF_{l.b.web}$ = *9.38925* %

where

$UF_{l.b.}$ = *9.38925* % - local buckling

$UF_{l.b.}$ - local buckling:

If criterion (Ψ > -1) is satisfied , then

$UF_{l.b.}$ = $d/t_w/(42\cdot\varepsilon/(0.67 + 0.33\cdot\Psi))\cdot100$

that is *criterion (0.999725 > -1) is satisfied , then*

$UF_{l.b.}$ = *9.5/(42·2.40882/(0.67 + 0.33·0.999725))·100 = 9.38925* %

where

d/t_w = *9.5* - width-to-thickness ratios
ε = *2.40882* - coefficient depending on $\sigma_{com.Ed}$
Ψ = *0.999725* Table 5.2 - ratio of stresses

Ψ - ratio of stresses:

$\Psi = \sigma_2/\sigma_1$

Ψ = *40.4893/40.5004 = 0.999725* Table 5.2

where

σ_2 = *40.4893* MPa - design normal stress (compressive stress is positive)
σ_1 = *40.5004* MPa - design normal stress (compressive stress is positive)

d/t_w - width-to-thickness ratios:

$d/t_w = (b - 3\cdot t)/t$

d/t_w = *(10 - 3·0.8)/0.8 = 9.5*

where

b = *10* cm - short leg of angle
t = *0.8* cm - plate thickness

b - short leg of angle:

$b = B_f$

$b = 10$ cm

where

$B_f = 10$ cm - flange width

t - plate thickness:

$t = T_f$

$t = 0.8$ cm

where

$T_f = 0.8$ cm - flange thickness

ε - coefficient depending on $\sigma_{com.Ed}$:

$\varepsilon = (235/\sigma_{com.Ed})^{1/2}$

$\varepsilon = (235/40.5004)^{1/2} = 2.40882$

where

$\sigma_{com.Ed} = 40.5004$ MPa - max design compressive stress in element

Design combination of loads No. 84, combination No. 12, fundamental combination (type I) :

N_{Ed}, kN	$M_{y,Ed}$, kN·m	$V_{z,Ed}$, kN	$M_{z,Ed}$, kN·m	$V_{y,Ed}$, kN	$M_{x,Ed}$, kN·m	$B_{w,Ed}$, kN·m^2	$T_{w,Ed}$, kN·m
-7.39	0	0	-20.17	14.6	0	0	0

$UF_{l.b.flange}$ - utilization percentage for load-bearing capacity of structural element in local buckling of flange:

$UF_{l.b.flange} = UF_{l.b.}$

$UF_{l.b.flange} = 9.38925$ %

where

$UF_{l.b.} = 9.38925$ % - local buckling

Design combination of loads No. 40, combination No. 4, fundamental combination (type I) :

N_{Ed}, kN	$M_{y,Ed}$, kN·m	$V_{z,Ed}$, kN	$M_{z,Ed}$, kN·m	$V_{y,Ed}$, kN	$M_{x,Ed}$, kN·m	$B_{w,Ed}$, kN·m^2	$T_{w,Ed}$, kN·m
-6.436	0	0	-5.957	10.13	0	0	0

UF_{ULS} - utilization percentage for load-bearing capacity of structural element by ultimate limit state:

$UF_{ULS} = UF_{bending}$

$UF_{ULS} = 10.835$ %

where

$UF_{bending} = 10.835$ % - utilization percentage for load-bearing capacity of structural element in bending

Design combination of loads No. 85 :

N_{Ed}, kN	$M_{y,Ed}$, kN·m	$V_{z,Ed}$, kN	$M_{z,Ed}$, kN·m	$V_{y,Ed}$, kN	$M_{x,Ed}$, kN·m	$B_{w,Ed}$, kN·m^2	$T_{w,Ed}$, kN·m
0	-0.08426	0	1.67	0	0	0	0

UF_{SLS} - utilization percentage for load-bearing capacity of structural element by serviceability limit state:

$$UF_{SLS} = UF_{deflection}$$

$$UF_{SLS} = 23.1906\ \%$$

where

$UF_{deflection} = 23.1906\ \%$ - utilization percentage for load-bearing capacity of structural element by deflection

Design combination of loads No. 84, combination No. 12, fundamental combination (type I) :

N_{Ed}, kN	$M_{y,Ed}$, kN·m	$V_{z,Ed}$, kN	$M_{z,Ed}$, kN·m	$V_{y,Ed}$, kN	$M_{x,Ed}$, kN·m	$B_{w,Ed}$, kN·m^2	$T_{w,Ed}$, kN·m
-7.39	0	0	-20.17	14.6	0	0	0

$UF_{L.B.}$ - utilization percentage for load-bearing capacity of structural element in local buckling:

$$UF_{L.B.} = UF_{l.b.flange}$$

$$UF_{L.B.} = 9.38925\ \%$$

where

$UF_{l.b.flange} = 9.38925\ \%$ - utilization percentage for load-bearing capacity of structural element in local buckling of flange

Design combination of loads No. 37, combination No. 1, fundamental combination (type I) :

N_{Ed}, kN	$M_{y,Ed}$, kN·m	$V_{z,Ed}$, kN	$M_{z,Ed}$, kN·m	$V_{y,Ed}$, kN	$M_{x,Ed}$, kN·m	$B_{w,Ed}$, kN·m^2	$T_{w,Ed}$, kN·m
-4.303	0.000993	0.07859	-6.093	10.32	-0.003682	0	0

T_{cr} = 854°C - critical temperature for element of steel structure :

Buckling resistance of a member in bending				
θ_{cr}, °C	$k_{y,\theta}$	$\gamma_{M,fi}$	$\gamma_{M,0}$	$\frac{M_{y,fi,Ed}}{M_{y,fi,\theta,Rd}} + \frac{M_{z,fi,Ed}}{M_{z,fi,\theta,Rd}} \le 1$
100	1	1	1	0.07206
200	1	1	1	0.07206
300	1	1	1	0.07206
400	1	1	1	0.07206
500	0.78	1	1	0.0923846
600	0.47	1	1	0.153319
700	0.23	1	1	0.313304
800	0.11	1	1	0.655091
900	0.06	1	1	1.201

1000	0.04	1	1	1.8015
1100	0.02	1	1	3.603
Critical temperature due to bending, ° C				863.181

Buckling of a member in one-plane bending								
$\theta_{cr,}$ °C	$k_{y,\theta}$	$k_{E,\theta}$	$\gamma_{M,fi}$	$\gamma_{M,0}$	$\lambda_{LT,\theta}$	φ_{θ}	$X_{LT,fi}$	$\frac{M_{y,fi,Ed}}{M_{b,fi,\theta,Rd}} + \frac{M_{z,fi,Ed}}{M_{b,fi,\theta,Rd}} \le 1$
100	1	1	1	1	0.0974723	0.531688	0.948438	0.075977
200	1	0.9	1	1	0.102745	0.533673	0.94575	0.0761929
300	1	0.8	1	1	0.108977	0.536055	0.942582	0.076449
400	1	0.7	1	1	0.116502	0.538983	0.93877	0.0767594
500	0.78	0.6	1	1	0.111136	0.536889	0.941487	0.0981255
600	0.47	0.31	1	1	0.120019	0.540371	0.936992	0.163628
700	0.23	0.13	1	1	0.12965	0.544235	0.932139	0.33611
800	0.11	0.09	1	1	0.10776	0.535587	0.9432	0.694536
900	0.06	0.0675	1	1	0.0918978	0.529619	0.951289	1.26249
1000	0.04	0.045	1	1	0.0918978	0.529619	0.951289	1.89373
1100	0.02	0.0225	1	1	0.0918978	0.529619	0.951289	3.78747
Critical temperature due to buckling, ° C								853.783

Critical temperature, ° C	853.783

Shear resistance				
$\theta_{cr,}$ °C	$k_{y,\theta}$	$\gamma_{M,0}$	$\gamma_{M,fi}$	$\frac{V_{fi,Ed}}{V_{fi,\theta,Rd}} \le 1$
100	1	1	1	0.0175699
200	1	1	1	0.0175699
300	1	1	1	0.0175699
400	1	1	1	0.0175699
500	0.78	1	1	0.0225255
600	0.47	1	1	0.0373828
700	0.23	1	1	0.0763909
800	0.11	1	1	0.159726
900	0.06	1	1	0.292832
1000	0.04	1	1	0.439248
1100	0.02	1	1	0.878495
Critical temperature, ° C				1100

The influence of Mx force on fire analysis is not considered.

Class - the highest class of cross-section determined in computation of cross-section:

Class = $Class_{out.el.}$

Class = *1* = *1* Table 5.2

where

$Class_{out.el.}$ = *1* Table 5.2

$Class_{out.el.}$ - the highest class of outstand elements:

If criterion ($\sigma_1 \leq 0$ AND $\sigma_2 \leq 0$) is satisfied , then

that is *criterion (-11.5826 ≤ 0 AND -11.9842 ≤ 0) is satisfied* , then

$Class_{out.el.}$ = *1* Table 5.2

where

σ_1 = *-11.5826* MPa - design normal stress (compressive stress is positive)
σ_2 = *-11.9842* MPa - design normal stress (compressive stress is positive)

Design combination of loads No. 28, combination No. 4, fundamental combination (type I) :

N_{Ed}, kN	$M_{y,Ed}$, kN·m	$V_{z,Ed}$, kN	$M_{z,Ed}$, kN·m	$V_{y,Ed}$, kN	$M_{x,Ed}$, kN·m	$B_{w,Ed}$, kN·m^2	$T_{w,Ed}$, kN·m
-6.174	0	0	-1.724	7.413	0	0	0

$UF_{bending}$ - utilization percentage for load-bearing capacity of structural element in bending:

$UF_{bending} = |(-1 \cdot UF_{bending.y} + 0 \cdot UF_{bending.z} + UF_w)| \cdot 100$

$UF_{bending} = |(-1 \cdot 0.0313634 + 0 \cdot 0 + 0)| \cdot 100 = 3.13634$ %

where

$UF_{bending.y}$ = *0.0313634* %/100% - utilization fraction for load-bearing capacity of the structural element in bending
$UF_{bending.z}$ = *0* %/100% - utilization fraction for load-bearing capacity of the structural element in bending
UF_w = *0* - component takes into account the reduction in load-bearing capacity of the section in case of warping

$UF_{bending.y}$ - utilization fraction for load-bearing capacity of the structural element in bending:

$UF_{bending.y} = |M_{y.Ed}| / (W_{pl.y} \cdot fy \cdot 10^{-3} / \gamma_{M0}) + \rho_z$

$UF_{bending.y} = |-1.72423| / (169.156 \cdot 325 \cdot 10^{-3} / 1) + 0 = 0.0313634$ %/100%

where

$M_{y.Ed}$ = *-1.72423* kNm - design bending moment
$W_{pl.y}$ = *169.156* cm^3 - plastic section modulus
fy = *325* MPa - yield strength
γ_{M0} = *1* - partial safety factor in determining load-bearing capacity of cross-sections by strength regardless of class
ρ_z = *0* - reduction factor to determine reduced design value of the resistance to bending moment making allowance of the presence of shear force

$UF_{bending.z}$ - utilization fraction for load-bearing capacity of the structural element in bending:

$UF_{bending.z} = |M_{z.Ed}| / (W_{pl.z} \cdot fy \cdot 10^{-3} / \gamma_{M0}) + \rho_y$

$UF_{bending.z} = |0| / (127.85 \cdot 325 \cdot 10^{-3} / 1) + 0 = 0$ %/100%

where

$M_{z.Ed}$ = *0* kNm - design bending moment
$W_{pl.z}$ = *127.85* cm^3 - plastic section modulus
fy = *325* MPa - yield strength
γ_{M0} = *1* - partial safety factor in determining load-bearing capacity of cross-sections by strength regardless of class
ρ_y = *0* - reduction factor to determine reduced design value of the resistance to bending moment making allowance of the presence of shear force

$M_{z.Ed}$ - design bending moment:

$$M_{z.Ed} = -M_{y.Ed}$$

$$M_{z.Ed} = -0 = 0 \text{ kNm}$$

where

$M_{y.Ed} = 0$ kNm - design bending moment

UF_w - component takes into account the reduction in load-bearing capacity of the section in case of warping:

$$UF_w = \sigma_w/(fy \cdot \gamma_{M0})$$

$$UF_w = 0/(325 \cdot 1) = 0$$

where

$\sigma_w = 0$ MPa - normal stress at point from warping
$fy = 325$ MPa - yield strength
$\gamma_{M0} = 1$ - partial safety factor in determining load-bearing capacity of cross-sections by strength regardless of class

σ_w - normal stress at point from warping:

$$\sigma_w = B_{w.Ed} \cdot w_i / I_w \cdot 10^5$$

$$\sigma_w = 0 \cdot 6.97863/629.682 \cdot 10^5 = 0 \text{ MPa}$$

where

$B_{w.Ed} = 0$ kNm^2 - design balue for bimoment
$w_i = 6.97863$ cm^2 - warping coordinate for the point (sign "-" for compressive stress)
$I_w = 629.682$ cm^6 - warping constant

Design combination of loads No. 25, combination No. 1, fundamental combination (type I) :

N_{Ed}, kN	$M_{y,Ed}$, kN·m	$V_{z,Ed}$, kN	$M_{z,Ed}$, kN·m	$V_{y,Ed}$, kN	$M_{x,Ed}$, kN·m	$B_{w,Ed}$, kN·m^2	$T_{w,Ed}$, kN·m
-4.04	-0.03585	0.07859	-1.773	7.601	-0.003682	0	0

UF_{shear} - utilization percentage for load-bearing capacity of structural element in shear:

If criterion (Class = 3 OR Class = 4) is not satisfied , then

$$UF_{shear} = UF_{shear.z}$$

that is *criterion (1 = 3 OR 1 = 4) is not satisfied , then*

$$UF_{shear} = 1.96352 \%$$

where

$UF_{shear.z} = 1.96352$ % - utilization percentage for load-bearing capacity of structural element in shear
Class = 1 Table 5.2 - class of cross-section

Class - class of cross-section:

$$Class = Class_{out.el.}$$

$$Class = 1 = 1 \text{ Table } 5.2$$

where

$Class_{out.el.} = 1$ Table 5.2

$UF_{shear.z}$ - utilization percentage for load-bearing capacity of structural element in shear:

$$UF_{shear.z} = |V_{z.Ed}|/V_{pl.z.Rd} \cdot 100$$

$$UF_{shear.z} = |-7.60055|/387.088 \cdot 100 = 1.96352 \ \%$$

where

$V_{z.Ed} = -7.60055$ kN - design shear force
$V_{pl.z.Rd} = 387.088$ kN - design load-bearing capacity of the cross-section in shear for plastic analysis

$V_{z.Ed}$ - design shear force:

$$V_{z.Ed} = -V_{y.Ed}$$

$$V_{z.Ed} = -7.60055 = -7.60055 \text{ kN}$$

where

$V_{y.Ed} = 7.60055$ kN - design shear force

$V_{pl.z.Rd}$ - design load-bearing capacity of the cross-section in shear for plastic analysis:

$$V_{pl.z.Rd} = V_{pl.T.z.Rd}$$

$$V_{pl.z.Rd} = 387.088 \text{ kN}$$

where

$V_{pl.T.z.Rd} = 387.088$ kN - reduced design load-bending capacity of cross-section in shear for the plastic analysis with account of torsion

$V_{pl.T.z.Rd}$ - reduced design load-bending capacity of cross-section in shear for the plastic analysis with account of torsion:

$$V_{pl.T.z.Rd} = V_{pl.z.Rd} \cdot (1 - \tau_{t.Ed}/(fy/3^{1/2}/\gamma_{M0}))^{1/2}$$

$$V_{pl.T.z.Rd} = 387.106 \cdot (1 - 0.0176164/(325/3^{1/2}/1))^{1/2} = 387.088 \text{ kN}$$

where

$V_{pl.z.Rd} = 387.106$ kN - design load-bearing capacity of the cross-section in shear for plastic analysis
$\tau_{t.Ed} = 0.0176164$ MPa - design shear stress caused by torsional moment
$fy = 325$ MPa - yield strength
$\gamma_{M0} = 1$ - partial safety factor in determining load-bearing capacity of cross-sections by strength regardless of class

$V_{pl.z.Rd}$ - design load-bearing capacity of the cross-section in shear for plastic analysis:

$$V_{pl.z.Rd} = A_{v.z} \cdot fy \cdot 10^{-1}/(3^{1/2} \cdot \gamma_{M0})$$

$$V_{pl.z.Rd} = 20.6304 \cdot 325 \cdot 10^{-1}/(3^{1/2} \cdot 1) = 387.106 \text{ kN}$$

where

$A_{v.z} = 20.6304$ cm^2 - shear area of the cross-section along the local axis Z1*
$fy = 325$ MPa - yield strength
$\gamma_{M0} = 1$ - partial safety factor in determining load-bearing capacity of cross-sections by strength regardless of class

$\tau_{t.Ed}$ - design shear stress caused by torsional moment:

$\tau_{t.Ed} = |\tau_{t.Ed}|$

$\tau_{t.Ed} = |0.0176164| = 0.0176164$ MPa

where

$\tau_{t.Ed} = 0.0176164$ MPa - design shear stress caused by torsional moment

$\tau_{t.Ed}$ - design shear stress caused by torsional moment:

$\tau_{t.Ed} = |M_{x.Ed}| \cdot 10^3 / W_f$

$\tau_{t.Ed} = |-0.00368224| \cdot 10^3 / 209.024 = 0.0176164$ MPa

where

$M_{x.Ed} = -0.00368224$ kNm - design torsion moment
$W_f = 209.024$ cm^3 - torsional section modulus for flange

Design combination of loads No. 29, combination No. 5, fundamental combination (type I) :

N_{Ed}, kN	$M_{y,Ed}$, kN·m	$V_{z,Ed}$, kN	$M_{z,Ed}$, kN·m	$V_{y,Ed}$, kN	$M_{x,Ed}$, kN·m	$B_{w,Ed}$, kN·m^2	$T_{w,Ed}$, kN·m
-2.941	-0.05975	0.131	-1.546	5.657	-0.006137	0	0

$UF_{torsion}$ - utilization percentage for load-bearing capacity of structural element in torsion:

$UF_{torsion} = (\tau_{t.Ed} + \tau_{w.Ed}) / (fy/3^{1/2}/\gamma_{M0}) \cdot 100$

$UF_{torsion} = (0.0293604 + 0) / (325/3^{1/2}/1) \cdot 100 = 0.0156473$ %

where

$\tau_{t.Ed} = 0.0293604$ MPa - design shear stress caused by torsional moment
$\tau_{w.Ed} = 0$ MPa - design shear stress in warping torsion
$fy = 325$ MPa - yield strength
$\gamma_{M0} = 1$ - partial safety factor in determining load-bearing capacity of cross-sections by strength regardless of class

$\tau_{t.Ed}$ - design shear stress caused by torsional moment:

$\tau_{t.Ed} = |\tau_{t.Ed}|$

$\tau_{t.Ed} = |0.0293604| = 0.0293604$ MPa

where

$\tau_{t.Ed} = 0.0293604$ MPa - design shear stress caused by torsional moment

$\tau_{t.Ed}$ - design shear stress caused by torsional moment:

$\tau_{t.Ed} = |M_{x.Ed}| \cdot 10^3 / W_f$

$\tau_{t.Ed} = |-0.00613703| \cdot 10^3 / 209.024 = 0.0293604$ MPa

where

$M_{x.Ed} = -0.00613703$ kNm - design torsion moment
$W_f = 209.024$ cm^3 - torsional section modulus for flange

$\tau_{w.Ed}$ - design shear stress in warping torsion:

$\tau_{w.Ed} = |\tau_{w.Ed}|$

$\tau_{w.Ed} = |0| = 0$ MPa

where

$\tau_{w.Ed} = 0$ MPa - design shear stress in warping torsion

Design combination of loads No. 25, combination No. 1, fundamental combination (type I) :

N_{Ed}, kN	$M_{y,Ed}$, kN·m	$V_{z,Ed}$, kN	$M_{z,Ed}$, kN·m	$V_{y,Ed}$, kN	$M_{x,Ed}$, kN·m	$B_{w,Ed}$, kN·m^2	$T_{w,Ed}$, kN·m
-4.04	-0.03585	0.07859	-1.773	7.601	-0.003682	0	0

$UF_{buckling}$ - utilization percentage for load-bearing capacity of structural element by overall stability:

$UF_{buckling} = UF_{buckl.about\ Z1}$

$UF_{buckling} = 2.44262$ %

where

$UF_{buckl.about\ Z1} = 2.44262$ % - utilization percentage for load-bearing capacity of structural element for buckling relative to local axis Z1

$UF_{buckl.about\ Z1}$ - utilization percentage for load-bearing capacity of structural element for buckling relative to local axis Z1:

$UF_{buckl.about\ Z1} = UF_{buckl.about\ Y1}$

$UF_{buckl.about\ Z1} = 2.44262$ %

where

$UF_{buckl.about\ Y1} = 2.44262$ % - utilization percentage for load-bearing capacity of structural element for buckling relative to local axis Y1*

$UF_{buckl.about\ Y1}$ - utilization percentage for load-bearing capacity of structural element for buckling relative to local axis Y1*:

If criterion ($I_y \geq I_z$) is satisfied and
criterion ($\overline{\lambda}_{LT} > \overline{\lambda}_{LT.0}$ AND $|M_{y.Ed}|/M_{y.cr} > \overline{\lambda}_{LT.0}^2$) is not satisfied , then

$UF_{buckl.about\ Y1} = ((-k_{yy}) \cdot M_{y.Ed}/M_{b.Rd} + k_{yz} \cdot M_{z.Ed}/M_{b.Rd} - UF_w) \cdot 100$

that is *criterion ($1008.13 \geq 535.651$) is satisfied and*
criterion ($0.0974723 > 0.4$ AND $|-1.77301|/5786.41 > 0.4^2$) is not satisfied , then

$UF_{buckl.about\ Y1} = ((-0.745576) \cdot -1.77301/54.9758 + 0.441425 \cdot 0.0358514/41.5513 - 0) \cdot 100 = 2.44262$ %

where

$k_{yy} = 0.745576$ - interaction factors
$M_{y.Ed} = -1.77301$ kNm - design bending moment
$M_{b.Rd} = 54.9758$ kNm - design load-bearing capacity of the element in lateral torsional buckling
$k_{yz} = 0.441425$ - interaction factors
$M_{z.Ed} = 0.0358514$ kNm - design bending moment
$M_{b.Rd} = 41.5513$ kNm - design load-bearing capacity of the element in lateral torsional buckling
$UF_w = 0$ - component takes into account the reduction in load-bearing capacity of the section in case of warping
$I_y = 1008.13$ cm^4 - second moment of area about y-y axis
$I_z = 535.651$ cm^4 - second moment of area about z-z axis
$\overline{\lambda}_{LT} = 0.0974723$ - non-dimensional slenderness for lateral-torsional buckling in elastic stage

—

$\lambda_{LT.0}$ = *0.4* - rectilinear fragment of lateral torsional buckling curve for rolled sections
$M_{y.cr}$ = *5786.41* kNm - elastic critical moment for lateral-torsional buckling

$\overline{\lambda}_{LT}$ - non-dimensional slenderness for lateral-torsional buckling in elastic stage:

$$\overline{\lambda}_{LT} = (W_y \cdot fy \cdot 10^{-3} / M_{y.cr})^{1/2}$$

$$\overline{\lambda}_{LT} = (169.156 \cdot 325 \cdot 10^{-3} / 5786.41)^{1/2} = 0.0974723$$

where

W_y = *169.156* cm^3 - section modulus
fy = *325* MPa - yield strength
$M_{y.cr}$ = *5786.41* kNm - elastic critical moment for lateral-torsional buckling

W_y - section modulus:

If criterion (Class = 1 OR Class = 2) is satisfied , then

$$W_y = W_{pl.y}$$

that is *criterion (1 = 1 OR 1 = 2) is satisfied , then*

$$W_y = 169.156 \ cm^3$$

where

$W_{pl.y}$ = *169.156* cm^3 - plastic section modulus
Class = *1* Table 5.2 - class of cross-section

$M_{y.cr}$ - elastic critical moment for lateral-torsional buckling:

$$M_{y.cr} = C_1 \cdot \Pi^2 \cdot E \cdot I_z \cdot 10^{-8} / L_z^2 \cdot ((k_z^2 / kw^2 \cdot I_w \cdot 10^{-12} / (I_z \cdot 10^{-8}) + L_z^2 \cdot G \cdot I_t \cdot 10^{-8} / (3.14159^2 \cdot E \cdot I_z \cdot 10^{-8}) + (C_2 \cdot z_g \cdot 10^{-2} - C_3 \cdot z_j \cdot 10^{-2}) \cdot (C_2 \cdot z_g \cdot 10^{-2} - C_3 \cdot z_j \cdot 10^{-2}))^{1/2} - (C_2 \cdot z_g \cdot 10^{-2} - C_3 \cdot z_j \cdot 10^{-2})) \cdot 10^3$$

$$M_{y.cr} = 2.57 \cdot 3.14159^2 \cdot 210000 \cdot 535.651 \cdot 10^{-8} / 1^2 \cdot ((1^2 / 1^2 \cdot 629.682 \cdot 10^{-12} / (535.651 \cdot 10^{-8}) + 1^2 \cdot 81000 \cdot 1208.38 \cdot 10^{-8} / (3.14159^2 \cdot 210000 \cdot 535.651 \cdot 10^{-8}) + (1.55 \cdot 7.5 \cdot 10^{-2} - 0.75 \cdot 0 \cdot 10^{-2}) \cdot (1.55 \cdot 7.5 \cdot 10^{-2} - 0.75 \cdot 0 \cdot 10^{-2}))^{1/2} - (1.55 \cdot 7.5 \cdot 10^{-2} - 0.75 \cdot 0 \cdot 10^{-2})) \cdot 10^3 = 5786.41 \text{ kNm}$$

where

C_1 = *2.57* - factor
Π = *3.14159* - mathematical constant
E = *210000* MPa - modulus of elasticity
I_z = *535.651* cm^4 - second moment of area about z-z axis
L_z = *1* m - buckling length
k_z = *1* - factor for considering type of restraints at the end of the element from rotation about axis Z1-Z1*
kw = *1* - effective length factor for warping
I_w = *629.682* cm^6 - warping constant
G = *81000* MPa - shear modulus
I_t = *1208.38* cm^4 - torsional constant
C_2 = *1.55* - factor
z_g = *7.5* cm - coordinate of the point where external load is applied to relative to the shear (flexural) centre of the section
C_3 = *0.75* - factor
z_j = *0* cm - monosymmetry parameter

k_{yy} - interaction factors:

If criterion (Class = 3 OR Class = 4) is not satisfied , then

$$k_{yy} = C_{my} \cdot (1 + (\overline{\lambda}_y - 0.2) \cdot |N_{Ed}| / (\chi_y \cdot N_{Rk} / \gamma_{M1}))$$

that is *criterion (1 = 3 OR 1 = 4) is not satisfied , then*

$k_{yy} = 0.745576 \cdot (1 + (0.117065 - 0.2) \cdot |0| / (1 \cdot 1145.38/1)) = 0.745576$

where

$C_{my} = 0.745576$ - factor
$\overline{\lambda}_y = 0.117065$ - non-dimensional slenderness of the member for buckling
$N_{Ed} = 0$ kN - design axial force
$\chi_y = 1$ - reduction factor for the buckling mode corresponding to the buckling curve, about Y1-Y1*
$N_{Rk} = 1145.38$ kN - characteristic value for load-bearing capacity in compression
$\gamma_{M1} = 1$ - partial safety factor in determining load-bearing capacity of element in buckling
Class = 1 Table 5.2 - class of cross-section

Class - class of cross-section:

$\text{Class} = \text{Class}_{out.el.}$

$\text{Class} = 1 = 1$ Table 5.2

where

$\text{Class}_{out.el.} = 1$ Table 5.2

C_{my} - factor:

$C_{my} = 0.2 + 0.8 \cdot \alpha_s$

$C_{my} = 0.2 + 0.8 \cdot 0.681971 = 0.745576$

where

$\alpha_s = 0.681971$ - factor

$\overline{\lambda}_y$ - non-dimensional slenderness of the member for buckling:

$\overline{\lambda}_y = (fy \cdot A \cdot 10^{-1} / N_{cr})^{1/2}$

$\overline{\lambda}_y = (325 \cdot 35.2425 \cdot 10^{-1} / 83578.4)^{1/2} = 0.117065$

where

$fy = 325$ MPa - yield strength
$A = 35.2425$ cm^2 - area of gross cross-section
$N_{cr} = 83578.4$ kN - elastic critical force for the relevant buckling mode

N_{Rk} - characteristic value for load-bearing capacity in compression:

$N_{Rk} = fy \cdot A \cdot 10^{-1}$

$N_{Rk} = 325 \cdot 35.2425 \cdot 10^{-1} = 1145.38$ kN

where

$fy = 325$ MPa - yield strength
$A = 35.2425$ cm^2 - area of gross cross-section

$M_{b.Rd}$ - design load-bearing capacity of the element in lateral torsional buckling:

If criterion ($I_y \geq I_z$) is satisfied and
criterion ($\overline{\lambda}_{LT} > \overline{\lambda}_{LT.0}$ AND $|M_{y.Ed}|/M_{y.cr} > \overline{\lambda}_{LT.0}^2$) is not satisfied , then

$M_{b.Rd} = W_y \cdot 10^{-3} \cdot fy / \gamma_{M1}$

that is *criterion (1008.13 ≥ 535.651) is satisfied and*
criterion (0.0974723 > 0.4 AND |-1.77301|/5786.41 > 0.4^2) is not satisfied , then

$M_{b.Rd} = 169.156 \cdot 10^{-3} \cdot 325/1 = 54.9758$ kNm

where

$W_y = 169.156$ cm^3 - section modulus
$fy = 325$ MPa - yield strength
$\gamma_{M1} = 1$ - partial safety factor in determining load-bearing capacity of element in buckling
$I_y = 1008.13$ cm^4 - second moment of area about y-y axis
$I_z = 535.651$ cm^4 - second moment of area about z-z axis
$\overline{\lambda}_{LT} = 0.0974723$ - non-dimensional slenderness for lateral-torsional buckling in elastic stage
$\overline{\lambda}_{LT.0} = 0.4$ - rectilinear fragment of lateral torsional buckling curve for rolled sections
$M_{y.Ed} = -1.77301$ kNm - design bending moment
$M_{y.cr} = 5786.41$ kNm - elastic critical moment for lateral-torsional buckling

k_{yz} - interaction factors:

If criterion (Class = 3 OR Class = 4) is not satisfied , then

$k_{yz} = 0.6 \cdot k_{zz}$

that is *criterion (1 = 3 OR 1 = 4) is not satisfied , then*

$k_{yz} = 0.6 \cdot 0.735708 = 0.441425$

where

$k_{zz} = 0.735708$ - interaction factors
Class = 1 Table 5.2 - class of cross-section

k_{zz} - interaction factors:

$k_{zz} = C_{mz} \cdot (1 + (\overline{\lambda}_z - 0.2) \cdot |N_{Ed}| / (\chi_z \cdot N_{Rk} / \gamma_{M1}))$

$k_{zz} = 0.735708 \cdot (1 + (0.321199 - 0.2) \cdot |0| / (0.972488 \cdot 1145.38/1)) = 0.735708$

where

$C_{mz} = 0.735708$ - factor
$\overline{\lambda}_z = 0.321199$ - non-dimensional slenderness of the member for buckling
$N_{Ed} = 0$ kN - design axial force
$\chi_z = 0.972488$ - reduction factor for the buckling mode corresponding to the buckling curve, about Z1-Z1*
$N_{Rk} = 1145.38$ kN - characteristic value for load-bearing capacity in compression
$\gamma_{M1} = 1$ - partial safety factor in determining load-bearing capacity of element in buckling

C_{mz} - factor:

$C_{mz} = 0.2 + 0.8 \cdot \alpha_s$

$C_{mz} = 0.2 + 0.8 \cdot 0.669635 = 0.735708$

where

$\alpha_s = 0.669635$ - factor

$\overline{\lambda}_z$ - non-dimensional slenderness of the member for buckling:

$\overline{\lambda}_z = (fy \cdot A \cdot 10^{-1} / N_{cr})^{1/2}$

$\overline{\lambda}_z = (325 \cdot 35.2425 \cdot 10^{-1} / 11102)^{1/2} = 0.321199$

where

$fy = 325$ MPa - yield strength
$A = 35.2425$ cm^2 - area of gross cross-section
$N_{cr} = 11102$ kN - elastic critical force for the relevant buckling mode

χ_z - reduction factor for the buckling mode corresponding to the buckling curve, about Z1-Z1*:

$$\chi_z = 1/(\Phi + (\Phi^2 - \overline{\lambda}_z^2)^{1/2})$$

$$\chi_z = 1/(0.56431 + (0.56431^2 - 0.321199^2)^{1/2}) = 0.972488$$

where

$\Phi = 0.56431$ - value to determine the reduction factor χ
$\overline{\lambda}_z = 0.321199$ - non-dimensional slenderness of the member for buckling

Φ - value to determine the reduction factor χ:

$$\Phi = 0.5 \cdot (1 + \alpha \cdot (\overline{\lambda}_z - 0.2) + \overline{\lambda}_z^2)$$

$$\Phi = 0.5 \cdot (1 + 0.21 \cdot (0.321199 - 0.2) + 0.321199^2) = 0.56431$$

where

$\alpha = 0.21$ - imperfection factor
$\overline{\lambda}_z = 0.321199$ - non-dimensional slenderness of the member for buckling

$M_{z.Ed}$ - design bending moment:

$$M_{z.Ed} = -M_{y.Ed}$$

$$M_{z.Ed} = --0.0358514 = 0.0358514 \text{ kNm}$$

where

$M_{y.Ed} = -0.0358514$ kNm - design bending moment

$M_{b.Rd}$ - design load-bearing capacity of the element in lateral torsional buckling:

If criterion ($I_y \geq I_z$) is satisfied and
criterion ($\overline{\lambda}_{LT} > \overline{\lambda}_{LT.0}$ AND $|M_{y.Ed}|/M_{y.cr} > \overline{\lambda}_{LT.0}^2$) is not satisfied , then

$$M_{b.Rd} = W_z \cdot 10^{-3} \cdot fy/\gamma_{M1}$$

that is *criterion (1008.13 ≥ 535.651) is satisfied and*
criterion (0.0974723 > 0.4 AND |-1.77301|/5786.41 > 0.4^2) is not satisfied , then

$$M_{b.Rd} = 127.85 \cdot 10^{-3} \cdot 325/1 = 41.5513 \text{ kNm}$$

where

$W_z = 127.85$ cm^3 - section modulus
$fy = 325$ MPa - yield strength
$\gamma_{M1} = 1$ - partial safety factor in determining load-bearing capacity of element in buckling
$I_y = 1008.13$ cm^4 - second moment of area about y-y axis
$I_z = 535.651$ cm^4 - second moment of area about z-z axis
$\overline{\lambda}_{LT} = 0.0974723$ - non-dimensional slenderness for lateral-torsional buckling in elastic stage
$\overline{\lambda}_{LT.0} = 0.4$ - rectilinear fragment of lateral torsional buckling curve for rolled sections
$M_{y.Ed} = -1.77301$ kNm - design bending moment
$M_{y.cr} = 5786.41$ kNm - elastic critical moment for lateral-torsional buckling

W_z - section modulus:

If criterion (Class = 1 OR Class = 2) is satisfied , then

$$W_z = W_{pl.z}$$

that is *criterion (1 = 1 OR 1 = 2) is satisfied , then*

$W_z = 127.85\ cm^3$

where

$W_{pl.z} = 127.85\ cm^3$ - plastic section modulus
Class = 1 Table 5.2 - class of cross-section

UF_w - component takes into account the reduction in load-bearing capacity of the section in case of warping:

$UF_w = \sigma_w/(fy \cdot \gamma_{M0})$

$UF_w = 0/(325 \cdot 1) = 0$

where

$\sigma_w = 0$ MPa - normal stress at point from warping
$fy = 325$ MPa - yield strength
$\gamma_{M0} = 1$ - partial safety factor in determining load-bearing capacity of cross-sections by strength regardless of class

σ_w - normal stress at point from warping:

$\sigma_w = B_{w.Ed} \cdot w_i / I_w \cdot 10^5$

$\sigma_w = 0 \cdot 6.97863/629.682 \cdot 10^5 = 0$ MPa

where

$B_{w.Ed} = 0\ kNm^2$ - design balue for bimoment
$w_i = 6.97863\ cm^2$ - warping coordinate for the point (sign "-" for compressive stress)
$I_w = 629.682\ cm^6$ - warping constant

Design combination of loads No. 85 :

N_{Ed}, kN	$M_{y,Ed}$, kN·m	$V_{z,Ed}$, kN	$M_{z,Ed}$, kN·m	$V_{y,Ed}$, kN	$M_{x,Ed}$, kN·m	$B_{w,Ed}$, kN·m^2	$T_{w,Ed}$, kN·m
0	-0.08426	0	1.67	0	0	0	0

$UF_{deflection}$ - utilization percentage for load-bearing capacity of structural element by deflection:

$UF_{deflection} = |\delta_y|/(L \cdot 10^3 \cdot 1/\delta_{lim}) \cdot 100$

$UF_{deflection} = |-1.81353|/(2.81299 \cdot 10^3 \cdot 0.004) \cdot 100 = 16.1175$ %

where

$\delta_y = -1.81353$ mm - max deflection
$L = 2.81299$ m - length
$1/\delta_{lim} = 0.004$ - ultimate relative deflection

$1/\delta_{lim}$ - ultimate relative deflection:

$1/\delta_{lim} = 1/250$

$1/\delta_{lim} = 1/250 = 0.004$

Design combination of loads No. 84, combination No. 12, fundamental combination (type I) :

N_{Ed}, kN	$M_{y,Ed}$, kN·m	$V_{z,Ed}$, kN	$M_{z,Ed}$, kN·m	$V_{y,Ed}$, kN	$M_{x,Ed}$, kN·m	$B_{w,Ed}$, kN·m^2	$T_{w,Ed}$, kN·m
-7.39	0	0	-20.17	14.6	0	0	0

$UF_{l.b.web}$ - utilization percentage for load-bearing capacity of structural element in local buckling of web:

$$UF_{l.b.web} = UF_{l.b.}$$

$$UF_{l.b.web} = 5.05144\ \%$$

where

$UF_{l.b.} = 5.05144\ \%$ - local buckling

$UF_{l.b.}$ - local buckling:

If criterion ($\Psi > -1$) is satisfied , then

$$UF_{l.b.} = d/t_w/(42\cdot\varepsilon/(0.67 + 0.33\cdot\Psi))\cdot 100$$

that is *criterion (0.966491 > -1) is satisfied , then*

$$UF_{l.b.} = 9.5/(42\cdot 4.42823/(0.67 + 0.33\cdot 0.966491))\cdot 100 = 5.05144\ \%$$

where

$d/t_w = 9.5$ - width-to-thickness ratios
$\varepsilon = 4.42823$ - coefficient depending on $\sigma_{com.Ed}$
$\Psi = 0.966491$ Table 5.2 - ratio of stresses

Ψ - ratio of stresses:

$$\Psi = \sigma_2/\sigma_1$$

$$\Psi = 11.5826/11.9842 = 0.966491 \text{ Table 5.2}$$

where

$\sigma_2 = 11.5826$ MPa - design normal stress (compressive stress is positive)
$\sigma_1 = 11.9842$ MPa - design normal stress (compressive stress is positive)

d/t_w - width-to-thickness ratios:

$$d/t_w = (b - 3\cdot t)/t$$

$$d/t_w = (10 - 3\cdot 0.8)/0.8 = 9.5$$

where

$b = 10$ cm - short leg of angle
$t = 0.8$ cm - plate thickness

b - short leg of angle:

$$b = B_f$$

$$b = 10 \text{ cm}$$

where

$B_f = 10$ cm - flange width

t - plate thickness:

$$t = T_f$$

$$t = 0.8 \text{ cm}$$

where

T_f = *0.8* cm - flange thickness

ε - coefficient depending on $\sigma_{com.Ed}$:

$\varepsilon = (235/\sigma_{com.Ed})^{0.5}$

$\varepsilon = (235/11.9842)^{0.5} = 4.42823$

where

$\sigma_{com.Ed}$ = *11.9842* MPa - max design compressive stress in element

Design combination of loads No. 84, combination No. 12, fundamental combination (type I) :

N_{Ed}, kN	$M_{y,Ed}$, kN·m	$V_{z,Ed}$, kN	$M_{z,Ed}$, kN·m	$V_{y,Ed}$, kN	$M_{x,Ed}$, kN·m	$B_{w,Ed}$, kN·m^2	$T_{w,Ed}$, kN·m
-7.39	0	0	-20.17	14.6	0	0	0

$UF_{l.b.flange}$ - utilization percentage for load-bearing capacity of structural element in local buckling of flange:

$UF_{l.b.flange} = UF_{l.b.}$

$UF_{l.b.flange}$ = *5.05144* %

where

$UF_{l.b.}$ = *5.05144* % - local buckling

Design combination of loads No. 28, combination No. 4, fundamental combination (type I) :

N_{Ed}, kN	$M_{y,Ed}$, kN·m	$V_{z,Ed}$, kN	$M_{z,Ed}$, kN·m	$V_{y,Ed}$, kN	$M_{x,Ed}$, kN·m	$B_{w,Ed}$, kN·m^2	$T_{w,Ed}$, kN·m
-6.174	0	0	-1.724	7.413	0	0	0

UF_{ULS} - utilization percentage for load-bearing capacity of structural element by ultimate limit state:

$UF_{ULS} = UF_{bending}$

UF_{ULS} = *3.13634* %

where

$UF_{bending}$ = *3.13634* % - utilization percentage for load-bearing capacity of structural element in bending

Design combination of loads No. 85 :

N_{Ed}, kN	$M_{y,Ed}$, kN·m	$V_{z,Ed}$, kN	$M_{z,Ed}$, kN·m	$V_{y,Ed}$, kN	$M_{x,Ed}$, kN·m	$B_{w,Ed}$, kN·m^2	$T_{w,Ed}$, kN·m
0	-0.08426	0	1.67	0	0	0	0

UF_{SLS} - utilization percentage for load-bearing capacity of structural element by serviceability limit state:

$UF_{SLS} = UF_{deflection}$

UF_{SLS} = *16.1175* %

where

$UF_{deflection}$ = *16.1175* % - utilization percentage for load-bearing capacity of structural element by deflection

Design combination of loads No. 84, combination No. 12, fundamental combination (type I) :

N_{Ed}, kN	$M_{y,Ed}$, kN·m	$V_{z,Ed}$, kN	$M_{z,Ed}$, kN·m	$V_{y,Ed}$, kN	$M_{x,Ed}$, kN·m	$B_{w,Ed}$, kN·m^2	$T_{w,Ed}$, kN·m
-7.39	0	0	-20.17	14.6	0	0	0

$UF_{L.B.}$ - utilization percentage for load-bearing capacity of structural element in local buckling:

$UF_{L.B.} = UF_{l.b.flange}$

$UF_{L.B.} = 5.05144\ \%$

where

$UF_{l.b.flange} = 5.05144\ \%$ - utilization percentage for load-bearing capacity of structural element in local buckling of flange

Design combination of loads No. 25, combination No. 1, fundamental combination (type I) :

N_{Ed}, kN	$M_{y,Ed}$, kN·m	$V_{z,Ed}$, kN	$M_{z,Ed}$, kN·m	$V_{y,Ed}$, kN	$M_{x,Ed}$, kN·m	$B_{w,Ed}$, kN·m^2	$T_{w,Ed}$, kN·m
-4.04	-0.03585	0.07859	-1.773	7.601	-0.003682	0	0

T_{cr} = 1076°C - critical temperature for element of steel structure :

Buckling resistance of a member in bending				
θ_{cr}, °C	$k_{y,\theta}$	$\gamma_{M,fi}$	$\gamma_{M,0}$	$\frac{M_{y,fi,Ed}}{M_{y,fi,\theta,Rd}} + \frac{M_{z,fi,Ed}}{M_{z,fi,\theta,Rd}} \le 1$
100	1	1	1	0.0216322
200	1	1	1	0.0216322
300	1	1	1	0.0216322
400	1	1	1	0.0216322
500	0.78	1	1	0.0277336
600	0.47	1	1	0.046026
700	0.23	1	1	0.0940532
800	0.11	1	1	0.196657
900	0.06	1	1	0.360537
1000	0.04	1	1	0.540806
1100	0.02	1	1	1.08161
Critical temperature due to bending, ° C				1084.91

Buckling of a member in one-plane bending								
θ_{cr}, °C	$k_{y,\theta}$	$k_{E,\theta}$	$\gamma_{M,fi}$	$\gamma_{M,0}$	$\lambda_{LT,\theta}$	φ_{θ}	$X_{LT,fi}$	$\frac{M_{y,fi,Ed}}{M_{b,fi,\theta,Rd}} + \frac{M_{z,fi,Ed}}{M_{b,fi,\theta,Rd}} \le 1$
100	1	1	1	1	0.0974723	0.531688	0.948438	0.0227896
200	1	0.9	1	1	0.102745	0.533673	0.94575	0.0228534
300	1	0.8	1	1	0.108977	0.536055	0.942582	0.022929
400	1	0.7	1	1	0.116502	0.538983	0.93877	0.0230207
500	0.78	0.6	1	1	0.111136	0.536889	0.941487	0.0294299
600	0.47	0.31	1	1	0.120019	0.540371	0.936992	0.0490718

700	0.23	0.13	1	1	0.12965	0.544235	0.932139	0.100791
800	0.11	0.09	1	1	0.10776	0.535587	0.9432	0.208311
900	0.06	0.0675	1	1	0.0918978	0.529619	0.951289	0.378706
1000	0.04	0.045	1	1	0.0918978	0.529619	0.951289	0.568059
1100	0.02	0.0225	1	1	0.0918978	0.529619	0.951289	1.13612
Critical temperature due to buckling, ° C								1076.04

Critical temperature, ° C	1076.04

Shear resistance				
θ_{cr}, °C	$k_{y,\theta}$	$\gamma_{M,0}$	$\gamma_{M,fi}$	$\frac{V_{fi,Ed}}{V_{fi,\theta,Rd}} \leq 1$
100	1	1	1	0.0130046
200	1	1	1	0.0130046
300	1	1	1	0.0130046
400	1	1	1	0.0130046
500	0.78	1	1	0.0166725
600	0.47	1	1	0.0276693
700	0.23	1	1	0.0565417
800	0.11	1	1	0.118223
900	0.06	1	1	0.216743
1000	0.04	1	1	0.325115
1100	0.02	1	1	0.650229
Critical temperature, ° C				1100

The influence of Mx force on fire analysis is not considered.

Class - the highest class of cross-section determined in computation of cross-section:

Class = $Class_{out.el.}$

Class = *1* = *1* Table 5.2

where

$Class_{out.el.}$ = *1* Table 5.2

$Class_{out.el.}$ - the highest class of outstand elements:

If criterion ($\sigma_1 \leq 0$ AND $\sigma_2 \leq 0$) is satisfied , then

that is *criterion (-6.46207 ≤ 0 AND -7.27636 ≤ 0) is satisfied* , then

$Class_{out.el.}$ = *1* Table 5.2

where

σ_1 = *-6.46207* MPa - design normal stress (compressive stress is positive)
σ_2 = *-7.27636* MPa - design normal stress (compressive stress is positive)

Design combination of loads No. 15, combination No. 3, fundamental combination (type I) :

N_{Ed}, kN	$M_{y,Ed}$, kN·m	$V_{z,Ed}$, kN	$M_{z,Ed}$, kN·m	$V_{y,Ed}$, kN	$M_{x,Ed}$, kN·m	$B_{w,Ed}$, kN·m^2	$T_{w,Ed}$, kN·m
-4.147	0	0	1.134	3.544	0	0	0

$UF_{bending}$ - utilization percentage for load-bearing capacity of structural element in bending:

$$UF_{bending} = |(1 \cdot UF_{bending.y} + 0 \cdot UF_{bending.z} + UF_w)| \cdot 100$$

$$UF_{bending} = |(1 \cdot 0.020625 + 0 \cdot 0 + 0)| \cdot 100 = 2.0625 \ \%$$

where

$UF_{bending.y} = 0.020625$ %/100% - utilization fraction for load-bearing capacity of the structural element in bending
$UF_{bending.z} = 0$ %/100% - utilization fraction for load-bearing capacity of the structural element in bending
$UF_w = 0$ - component takes into account the reduction in load-bearing capacity of the section in case of warping

$UF_{bending.y}$ - utilization fraction for load-bearing capacity of the structural element in bending:

$$UF_{bending.y} = |M_{y.Ed}| / (W_{pl.y} \cdot fy \cdot 10^{-3} / \gamma_{M0}) + \rho_z$$

$$UF_{bending.y} = |1.13387| / (169.156 \cdot 325 \cdot 10^{-3} / 1) + 0 = 0.020625 \ \%/100\%$$

where

$M_{y.Ed} = 1.13387$ kNm - design bending moment
$W_{pl.y} = 169.156$ cm^3 - plastic section modulus
$fy = 325$ MPa - yield strength
$\gamma_{M0} = 1$ - partial safety factor in determining load-bearing capacity of cross-sections by strength regardless of class
$\rho_z = 0$ - reduction factor to determine reduced design value of the resistance to bending moment making allowance of the presence of shear force

$UF_{bending.z}$ - utilization fraction for load-bearing capacity of the structural element in bending:

$$UF_{bending.z} = |M_{z.Ed}| / (W_{pl.z} \cdot fy \cdot 10^{-3} / \gamma_{M0}) + \rho_y$$

$$UF_{bending.z} = |0| / (127.85 \cdot 325 \cdot 10^{-3} / 1) + 0 = 0 \ \%/100\%$$

where

$M_{z.Ed} = 0$ kNm - design bending moment
$W_{pl.z} = 127.85$ cm^3 - plastic section modulus
$fy = 325$ MPa - yield strength
$\gamma_{M0} = 1$ - partial safety factor in determining load-bearing capacity of cross-sections by strength regardless of class
$\rho_y = 0$ - reduction factor to determine reduced design value of the resistance to bending moment making allowance of the presence of shear force

$M_{z.Ed}$ - design bending moment:

$$M_{z.Ed} = -M_{y.Ed}$$

$$M_{z.Ed} = -0 = 0 \ \text{kNm}$$

where

$M_{y.Ed} = 0$ kNm - design bending moment

UF_w - component takes into account the reduction in load-bearing capacity of the section in case of warping:

$$UF_w = \sigma_w / (fy \cdot \gamma_{M0})$$

$$UF_w = 0 / (325 \cdot 1) = 0$$

where

$\sigma_w = 0$ MPa - normal stress at point from warping
$fy = 325$ MPa - yield strength

γ_{M0} = *1* - partial safety factor in determining load-bearing capacity of cross-sections by strength regardless of class

σ_w - normal stress at point from warping:

$\sigma_w = B_{w.Ed} \cdot w_i / I_w \cdot 10^5$

$\sigma_w = 0 \cdot 6.97863 / 629.682 \cdot 10^5 = 0$ MPa

where

$B_{w.Ed}$ = *0* kNm^2 - design balue for bimoment
w_i = *6.97863* cm^2 - warping coordinate for the point (sign "-" for compressive stress)
I_w = *629.682* cm^6 - warping constant

Design combination of loads No. 13, combination No. 1, fundamental combination (type I) :

N_{Ed}, kN	$M_{y,Ed}$, kN·m	$V_{z,Ed}$, kN	$M_{z,Ed}$, kN·m	$V_{y,Ed}$, kN	$M_{x,Ed}$, kN·m	$B_{w,Ed}$, kN·m^2	$T_{w,Ed}$, kN·m
-3.655	-0.0727	0.07859	1.034	3.608	-0.003682	0	0

UF_{shear} - utilization percentage for load-bearing capacity of structural element in shear:

If criterion (Class = 3 OR Class = 4) is not satisfied , then

$UF_{shear} = UF_{shear.z}$

that is *criterion (1 = 3 OR 1 = 4) is not satisfied , then*

$UF_{shear} = 0.932061$ %

where

$UF_{shear.z}$ = *0.932061* % - utilization percentage for load-bearing capacity of structural element in shear
Class = *1* Table 5.2 - class of cross-section

Class - class of cross-section:

Class = $Class_{out.el.}$

Class = *1* = *1* Table 5.2

where

$Class_{out.el.}$ = *1* Table 5.2

$UF_{shear.z}$ - utilization percentage for load-bearing capacity of structural element in shear:

$UF_{shear.z} = |V_{z.Ed}| / V_{pl.z.Rd} \cdot 100$

$UF_{shear.z} = |-3.6079| / 387.088 \cdot 100 = 0.932061$ %

where

$V_{z.Ed}$ = *-3.6079* kN - design shear force
$V_{pl.z.Rd}$ = *387.088* kN - design load-bearing capacity of the cross-section in shear for plastic analysis

$V_{z.Ed}$ - design shear force:

$V_{z.Ed} = -V_{y.Ed}$

$V_{z.Ed} = -3.6079 = -3.6079$ kN

where

$V_{y.Ed}$ = *3.6079* kN - design shear force

$V_{pl.z.Rd}$ - design load-bearing capacity of the cross-section in shear for plastic analysis:

$$V_{pl.z.Rd} = V_{pl.T.z.Rd}$$

$$V_{pl.z.Rd} = 387.088 \text{ kN}$$

where

$V_{pl.T.z.Rd}$ = *387.088* kN - reduced design load-bending capacity of cross-section in shear for the plastic analysis with account of torsion

$V_{pl.T.z.Rd}$ - reduced design load-bending capacity of cross-section in shear for the plastic analysis with account of torsion:

$$V_{pl.T.z.Rd} = V_{pl.z.Rd} \cdot (1 - \tau_{t.Ed} / (fy / 3^{1/2} / \gamma_{M0}))^{1/2}$$

$$V_{pl.T.z.Rd} = 387.106 \cdot (1 - 0.0176164 / (325 / 3^{1/2} / 1))^{1/2} = 387.088 \text{ kN}$$

where

$V_{pl.z.Rd}$ = *387.106* kN - design load-bearing capacity of the cross-section in shear for plastic analysis
$\tau_{t.Ed}$ = *0.0176164* MPa - design shear stress caused by torsional moment
fy = *325* MPa - yield strength
γ_{M0} = *1* - partial safety factor in determining load-bearing capacity of cross-sections by strength regardless of class

$V_{pl.z.Rd}$ - design load-bearing capacity of the cross-section in shear for plastic analysis:

$$V_{pl.z.Rd} = A_{v.z} \cdot fy \cdot 10^{-1} / (3^{1/2} \cdot \gamma_{M0})$$

$$V_{pl.z.Rd} = 20.6304 \cdot 325 \cdot 10^{-1} / (3^{1/2} \cdot 1) = 387.106 \text{ kN}$$

where

$A_{v.z}$ = *20.6304* cm^2 - shear area of the cross-section along the local axis Z1*
fy = *325* MPa - yield strength
γ_{M0} = *1* - partial safety factor in determining load-bearing capacity of cross-sections by strength regardless of class

$\tau_{t.Ed}$ - design shear stress caused by torsional moment:

$$\tau_{t.Ed} = |\tau_{t.Ed}|$$

$$\tau_{t.Ed} = |0.0176164| = 0.0176164 \text{ MPa}$$

where

$\tau_{t.Ed}$ = *0.0176164* MPa - design shear stress caused by torsional moment

$\tau_{t.Ed}$ - design shear stress caused by torsional moment:

$$\tau_{t.Ed} = |M_{x.Ed}| \cdot 10^3 / W_f$$

$$\tau_{t.Ed} = |-0.00368224| \cdot 10^3 / 209.024 = 0.0176164 \text{ MPa}$$

where

$M_{x.Ed}$ = *-0.00368224* kNm - design torsion moment
W_f = *209.024* cm^3 - torsional section modulus for flange

Design combination of loads No. 17, combination No. 5, fundamental combination (type I) :

N_{Ed}, kN	$M_{y,Ed}$, kN·m	$V_{z,Ed}$, kN	$M_{z,Ed}$, kN·m	$V_{y,Ed}$, kN	$M_{x,Ed}$, kN·m	$B_{w,Ed}$, kN·m^2	$T_{w,Ed}$, kN·m
-2.677	-0.1212	0.131	0.5841	2.914	-0.006137	0	0

$UF_{torsion}$ - utilization percentage for load-bearing capacity of structural element in torsion:

$$UF_{torsion} = (\tau_{t.Ed} + \tau_{w.Ed}) / (fy/3^{1/2}/\gamma_{M0}) \cdot 100$$

$$UF_{torsion} = (0.0293604 + 0) / (325/3^{1/2}/1) \cdot 100 = 0.0156473 \ \%$$

where

$\tau_{t.Ed} = 0.0293604$ MPa - design shear stress caused by torsional moment
$\tau_{w.Ed} = 0$ MPa - design shear stress in warping torsion
$fy = 325$ MPa - yield strength
$\gamma_{M0} = 1$ - partial safety factor in determining load-bearing capacity of cross-sections by strength regardless of class

$\tau_{t.Ed}$ - design shear stress caused by torsional moment:

$$\tau_{t.Ed} = |\tau_{t.Ed}|$$

$$\tau_{t.Ed} = |0.0293604| = 0.0293604 \text{ MPa}$$

where

$\tau_{t.Ed} = 0.0293604$ MPa - design shear stress caused by torsional moment

$\tau_{t.Ed}$ - design shear stress caused by torsional moment:

$$\tau_{t.Ed} = |M_{x.Ed}| \cdot 10^3 / W_f$$

$$\tau_{t.Ed} = |-0.00613703| \cdot 10^3 / 209.024 = 0.0293604 \text{ MPa}$$

where

$M_{x.Ed} = -0.00613703$ kNm - design torsion moment
$W_f = 209.024$ cm^3 - torsional section modulus for flange

$\tau_{w.Ed}$ - design shear stress in warping torsion:

$$\tau_{w.Ed} = |\tau_{w.Ed}|$$

$$\tau_{w.Ed} = |0| = 0 \text{ MPa}$$

where

$\tau_{w.Ed} = 0$ MPa - design shear stress in warping torsion

Design combination of loads No. 13, combination No. 1, fundamental combination (type I) :

N_{Ed}, kN	$M_{y,Ed}$, kN·m	$V_{z,Ed}$, kN	$M_{z,Ed}$, kN·m	$V_{y,Ed}$, kN	$M_{x,Ed}$, kN·m	$B_{w,Ed}$, kN·m^2	$T_{w,Ed}$, kN·m
-3.655	-0.0727	0.07859	1.034	3.608	-0.003682	0	0

$UF_{buckling}$ - utilization percentage for load-bearing capacity of structural element by overall stability:

$$UF_{buckling} = UF_{buckl.about\ Z1}$$

$$UF_{buckling} = 1.47897 \ \%$$

where

$UF_{buckl.about\ Z1}$ = *1.47897* % - utilization percentage for load-bearing capacity of structural element for buckling relative to local axis Z1

$UF_{buckl.about\ Z1}$ - utilization percentage for load-bearing capacity of structural element for buckling relative to local axis Z1:

$$UF_{buckl.about\ Z1} = UF_{buckl.about\ Y1}$$

$$UF_{buckl.about\ Z1} = 1.47897\ \%$$

where

$UF_{buckl.about\ Y1}$ = *1.47897* % - utilization percentage for load-bearing capacity of structural element for buckling relative to local axis Y1*

$UF_{buckl.about\ Y1}$ - utilization percentage for load-bearing capacity of structural element for buckling relative to local axis Y1*:

If criterion ($I_y \geq I_z$) is satisfied and
criterion ($\overline{\lambda}_{LT} > \overline{\lambda}_{LT.0}$ AND $|M_{y.Ed}|/M_{y.cr} > \overline{\lambda}_{LT.0}^2$) is not satisfied , then

$$UF_{buckl.about\ Y1} = (k_{yy} \cdot M_{y.Ed}/M_{b.Rd} + k_{yz} \cdot M_{z.Ed}/M_{b.Rd} - UF_w) \cdot 100$$

that is *criterion ($1008.13 \geq 535.651$) is satisfied and*
criterion ($0.0974723 > 0.4$ AND $|1.03359|/5786.41 > 0.4^2$) is not satisfied , then

$$UF_{buckl.about\ Y1} = (0.745576 \cdot 1.03359/54.9758 + 0.441425 \cdot 0.0726959/41.5513 - 0) \cdot 100 = 1.47897\ \%$$

where

k_{yy} = *0.745576* - interaction factors
$M_{y.Ed}$ = *1.03359* kNm - design bending moment
$M_{b.Rd}$ = *54.9758* kNm - design load-bearing capacity of the element in lateral torsional buckling
k_{yz} = *0.441425* - interaction factors
$M_{z.Ed}$ = *0.0726959* kNm - design bending moment
$M_{b.Rd}$ = *41.5513* kNm - design load-bearing capacity of the element in lateral torsional buckling
UF_w = *0* - component takes into account the reduction in load-bearing capacity of the section in case of warping
I_y = *1008.13* cm^4 - second moment of area about y-y axis
I_z = *535.651* cm^4 - second moment of area about z-z axis
$\overline{\lambda}_{LT}$ = *0.0974723* - non-dimensional slenderness for lateral-torsional buckling in elastic stage
$\overline{\lambda}_{LT.0}$ = *0.4* - rectilinear fragment of lateral torsional buckling curve for rolled sections
$M_{y.cr}$ = *5786.41* kNm - elastic critical moment for lateral-torsional buckling

$\overline{\lambda}_{LT}$ - non-dimensional slenderness for lateral-torsional buckling in elastic stage:

$$\overline{\lambda}_{LT} = (W_y \cdot fy \cdot 10^{-3}/M_{y.cr})^{1/2}$$

$$\overline{\lambda}_{LT} = (169.156 \cdot 325 \cdot 10^{-3}/5786.41)^{1/2} = 0.0974723$$

where

W_y = *169.156* cm^3 - section modulus
fy = *325* MPa - yield strength
$M_{y.cr}$ = *5786.41* kNm - elastic critical moment for lateral-torsional buckling

W_y - section modulus:

If criterion (Class = 1 OR Class = 2) is satisfied , then

$$W_y = W_{pl.y}$$

that is *criterion (1 = 1 OR 1 = 2) is satisfied , then*

W_y = *169.156* cm^3

where

$W_{pl.y}$ = *169.156* cm^3 - plastic section modulus
Class = *1* Table 5.2 - class of cross-section

$M_{y.cr}$ - elastic critical moment for lateral-torsional buckling:

$$M_{y.cr} = C_1 \cdot \Pi^2 \cdot E \cdot I_z \cdot 10^{-8} / L_z^2 \cdot ((k_z^2/kw^2 \cdot I_w \cdot 10^{-12}/(I_z \cdot 10^{-8}) + L_z^2 \cdot G \cdot I_t \cdot 10^{-8}/(3.14159^2 \cdot E \cdot I_z \cdot 10^{-8}) + (C_2 \cdot z_g \cdot 10^{-2} - C_3 \cdot z_j \cdot 10^{-2}) \cdot (C_2 \cdot z_g \cdot 10^{-2} - C_3 \cdot z_j \cdot 10^{-2}))^{1/2} - (C_2 \cdot z_g \cdot 10^{-2} - C_3 \cdot z_j \cdot 10^{-2})) \cdot 10^3$$

$$M_{y.cr} = 2.57 \cdot 3.14159^2 \cdot 210000 \cdot 535.651 \cdot 10^{-8}/1^2 \cdot ((1^2/1^2 \cdot 629.682 \cdot 10^{-12}/(535.651 \cdot 10^{-8}) + 1^2 \cdot 81000 \cdot 1208.38 \cdot 10^{-8}/(3.14159^2 \cdot 210000 \cdot 535.651 \cdot 10^{-8}) + (1.55 \cdot 7.5 \cdot 10^{-2} - 0.75 \cdot 0 \cdot 10^{-2}) \cdot (1.55 \cdot 7.5 \cdot 10^{-2} - 0.75 \cdot 0 \cdot 10^{-2}))^{1/2} - (1.55 \cdot 7.5 \cdot 10^{-2} - 0.75 \cdot 0 \cdot 10^{-2})) \cdot 10^3 = 5786.41 \text{ kNm}$$

where

C_1 = *2.57* - factor
Π = *3.14159* - mathematical constant
E = *210000* MPa - modulus of elasticity
I_z = *535.651* cm^4 - second moment of area about z-z axis
L_z = *1* m - buckling length
k_z = *1* - factor for considering type of restraints at the end of the element from rotation about axis Z1-Z1*
kw = *1* - effective length factor for warping
I_w = *629.682* cm^6 - warping constant
G = *81000* MPa - shear modulus
I_t = *1208.38* cm^4 - torsional constant
C_2 = *1.55* - factor
z_g = *7.5* cm - coordinate of the point where external load is applied to relative to the shear (flexural) centre of the section
C_3 = *0.75* - factor
z_j = *0* cm - monosymmetry parameter

k_{yy} - interaction factors:

If criterion (Class = 3 OR Class = 4) is not satisfied , then

$$k_{yy} = C_{my} \cdot (1 + (\overline{\lambda}_y - 0.2) \cdot |N_{Ed}|/(\chi_y \cdot N_{Rk}/\gamma_{M1}))$$

that is *criterion (1 = 3 OR 1 = 4) is not satisfied , then*

$$k_{yy} = 0.745576 \cdot (1 + (0.117065 - 0.2) \cdot |0|/(1 \cdot 1145.38/1)) = 0.745576$$

where

C_{my} = *0.745576* - factor
$\overline{\lambda}_y$ = *0.117065* - non-dimensional slenderness of the member for buckling
N_{Ed} = *0* kN - design axial force
χ_y = *1* - reduction factor for the buckling mode corresponding to the buckling curve, about Y1-Y1*
N_{Rk} = *1145.38* kN - characteristic value for load-bearing capacity in compression
γ_{M1} = *1* - partial safety factor in determining load-bearing capacity of element in buckling
Class = *1* Table 5.2 - class of cross-section

Class - class of cross-section:

Class = $Class_{out.el.}$

Class = *1* = *1* Table 5.2

where

$Class_{out.el.}$ = *1* Table 5.2

C_{my} - factor:

$$C_{my} = 0.2 + 0.8 \cdot \alpha_s$$

$$C_{my} = 0.2 + 0.8 \cdot 0.681971 = 0.745576$$

where

$\alpha_s = 0.681971$ - factor

$\overline{\lambda}_y$ - non-dimensional slenderness of the member for buckling:

$$\overline{\lambda}_y = (fy \cdot A \cdot 10^{-1} / N_{cr})^{1/2}$$

$$\overline{\lambda}_y = (325 \cdot 35.2425 \cdot 10^{-1} / 83578.4)^{1/2} = 0.117065$$

where

$fy = 325$ MPa - yield strength
$A = 35.2425$ cm^2 - area of gross cross-section
$N_{cr} = 83578.4$ kN - elastic critical force for the relevant buckling mode

N_{Rk} - characteristic value for load-bearing capacity in compression:

$$N_{Rk} = fy \cdot A \cdot 10^{-1}$$

$$N_{Rk} = 325 \cdot 35.2425 \cdot 10^{-1} = 1145.38 \text{ kN}$$

where

$fy = 325$ MPa - yield strength
$A = 35.2425$ cm^2 - area of gross cross-section

$M_{b.Rd}$ - design load-bearing capacity of the element in lateral torsional buckling:

If criterion ($I_y \geq I_z$) is satisfied and
criterion ($\overline{\lambda}_{LT} > \overline{\lambda}_{LT.0}$ AND $|M_{y.Ed}|/M_{y.cr} > \overline{\lambda}_{LT.0}^2$) is not satisfied , then

$$M_{b.Rd} = W_y \cdot 10^{-3} \cdot fy / \gamma_{M1}$$

that is *criterion (1008.13 ≥ 535.651) is satisfied and*
criterion (0.0974723 > 0.4 AND |1.03359|/5786.41 > 0.4^2) is not satisfied , then

$$M_{b.Rd} = 169.156 \cdot 10^{-3} \cdot 325 / 1 = 54.9758 \text{ kNm}$$

where

$W_y = 169.156$ cm^3 - section modulus
$fy = 325$ MPa - yield strength
$\gamma_{M1} = 1$ - partial safety factor in determining load-bearing capacity of element in buckling
$I_y = 1008.13$ cm^4 - second moment of area about y-y axis
$I_z = 535.651$ cm^4 - second moment of area about z-z axis
$\overline{\lambda}_{LT} = 0.0974723$ - non-dimensional slenderness for lateral-torsional buckling in elastic stage
$\overline{\lambda}_{LT.0} = 0.4$ - rectilinear fragment of lateral torsional buckling curve for rolled sections
$M_{y.Ed} = 1.03359$ kNm - design bending moment
$M_{y.cr} = 5786.41$ kNm - elastic critical moment for lateral-torsional buckling

k_{yz} - interaction factors:

If criterion (Class = 3 OR Class = 4) is not satisfied , then

$$k_{yz} = 0.6 \cdot k_{zz}$$

that is *criterion (1 = 3 OR 1 = 4) is not satisfied* , then

$k_{yz} = 0.6 \cdot 0.735708 = 0.441425$

where

$k_{zz} = 0.735708$ - interaction factors
Class = *1* Table 5.2 - class of cross-section

k_{zz} - interaction factors:

$k_{zz} = C_{mz} \cdot (1 + (\overline{\lambda}_z - 0.2) \cdot |N_{Ed}| / (\chi_z \cdot N_{Rk} / \gamma_{M1}))$

$k_{zz} = 0.735708 \cdot (1 + (0.321199 - 0.2) \cdot |0| / (0.972488 \cdot 1145.38 / 1)) = 0.735708$

where

$C_{mz} = 0.735708$ - factor
$\overline{\lambda}_z = 0.321199$ - non-dimensional slenderness of the member for buckling
$N_{Ed} = 0$ kN - design axial force
$\chi_z = 0.972488$ - reduction factor for the buckling mode corresponding to the buckling curve, about Z1-Z1*
$N_{Rk} = 1145.38$ kN - characteristic value for load-bearing capacity in compression
$\gamma_{M1} = 1$ - partial safety factor in determining load-bearing capacity of element in buckling

C_{mz} - factor:

$C_{mz} = 0.2 + 0.8 \cdot \alpha_s$

$C_{mz} = 0.2 + 0.8 \cdot 0.669635 = 0.735708$

where

$\alpha_s = 0.669635$ - factor

$\overline{\lambda}_z$ - non-dimensional slenderness of the member for buckling:

$\overline{\lambda}_z = (fy \cdot A \cdot 10^{-1} / N_{cr})^{1/2}$

$\overline{\lambda}_z = (325 \cdot 35.2425 \cdot 10^{-1} / 11102)^{1/2} = 0.321199$

where

$fy = 325$ MPa - yield strength
$A = 35.2425$ cm^2 - area of gross cross-section
$N_{cr} = 11102$ kN - elastic critical force for the relevant buckling mode

χ_z - reduction factor for the buckling mode corresponding to the buckling curve, about Z1-Z1*:

$\chi_z = 1 / (\Phi + (\Phi^2 - \overline{\lambda}_z^2)^{1/2})$

$\chi_z = 1 / (0.56431 + (0.56431^2 - 0.321199^2)^{1/2}) = 0.972488$

where

$\Phi = 0.56431$ - value to determine the reduction factor χ
$\overline{\lambda}_z = 0.321199$ - non-dimensional slenderness of the member for buckling

Φ - value to determine the reduction factor χ:

$\Phi = 0.5 \cdot (1 + \alpha \cdot (\overline{\lambda}_z - 0.2) + \overline{\lambda}_z^2)$

$\Phi = 0.5 \cdot (1 + 0.21 \cdot (0.321199 - 0.2) + 0.321199^2) = 0.56431$

where

α = *0.21* - imperfection factor
$\bar{\lambda}_z$ = *0.321199* - non-dimensional slenderness of the member for buckling

$M_{z.Ed}$ - design bending moment:

$$M_{z.Ed} = -M_{y.Ed}$$

$$M_{z.Ed} = --0.0726959 = 0.0726959 \text{ kNm}$$

where

$M_{y.Ed}$ = *-0.0726959* kNm - design bending moment

$M_{b.Rd}$ - design load-bearing capacity of the element in lateral torsional buckling:

If criterion ($I_y \geq I_z$) is satisfied and
criterion ($\bar{\lambda}_{LT} > \bar{\lambda}_{LT.0}$ AND $|M_{y.Ed}|/M_{y.cr} > \bar{\lambda}_{LT.0}^2$) is not satisfied , then

$$M_{b.Rd} = W_z \cdot 10^{-3} \cdot fy/\gamma_{M1}$$

that is *criterion (1008.13 ≥ 535.651) is satisfied and*
criterion (0.0974723 > 0.4 AND |1.03359|/5786.41 > 0.4^2) is not satisfied , then

$$M_{b.Rd} = 127.85 \cdot 10^{-3} \cdot 325/1 = 41.5513 \text{ kNm}$$

where

W_z = *127.85* cm^3 - section modulus
fy = *325* MPa - yield strength
γ_{M1} = *1* - partial safety factor in determining load-bearing capacity of element in buckling
I_y = *1008.13* cm^4 - second moment of area about y-y axis
I_z = *535.651* cm^4 - second moment of area about z-z axis
$\bar{\lambda}_{LT}$ = *0.0974723* - non-dimensional slenderness for lateral-torsional buckling in elastic stage
$\bar{\lambda}_{LT.0}$ = *0.4* - rectilinear fragment of lateral torsional buckling curve for rolled sections
$M_{y.Ed}$ = *1.03359* kNm - design bending moment
$M_{y.cr}$ = *5786.41* kNm - elastic critical moment for lateral-torsional buckling

W_z - section modulus:

If criterion (Class = 1 OR Class = 2) is satisfied , then

$$W_z = W_{pl.z}$$

that is *criterion (1 = 1 OR 1 = 2) is satisfied , then*

$$W_z = 127.85 \text{ cm}^3$$

where

$W_{pl.z}$ = *127.85* cm^3 - plastic section modulus
Class = *1* Table 5.2 - class of cross-section

UF_w - component takes into account the reduction in load-bearing capacity of the section in case of warping:

$$UF_w = \sigma_w/(fy \cdot \gamma_{M0})$$

$$UF_w = 0/(325 \cdot 1) = 0$$

where

σ_w = *0* MPa - normal stress at point from warping
fy = *325* MPa - yield strength
γ_{M0} = *1* - partial safety factor in determining load-bearing capacity of cross-sections by strength regardless of class

σ_w - normal stress at point from warping:

$$\sigma_w = B_{w.Ed} \cdot w_i / I_w \cdot 10^5$$

$$\sigma_w = 0 \cdot -6.97863 / 629.682 \cdot 10^5 = 0 \text{ MPa}$$

where

$B_{w.Ed} = 0$ kNm^2 - design balue for bimoment
$w_i = -6.97863$ cm^2 - warping coordinate for the point (sign "-" for compressive stress)
$I_w = 629.682$ cm^6 - warping constant

Design combination of loads No. 85 :

N_{Ed}, kN	$M_{y,Ed}$, kN·m	$V_{z,Ed}$, kN	$M_{z,Ed}$, kN·m	$V_{y,Ed}$, kN	$M_{x,Ed}$, kN·m	$B_{w,Ed}$, kN·m^2	$T_{w,Ed}$, kN·m
0	-0.08426	0	1.67	0	0	0	0

$UF_{deflection}$ - utilization percentage for load-bearing capacity of structural element by deflection:

$$UF_{deflection} = |\delta_y| / (L \cdot 10^3 \cdot 1/\delta_{lim}) \cdot 100$$

$$UF_{deflection} = |-0.869558| / (2.81299 \cdot 10^3 \cdot 0.004) \cdot 100 = 7.72807 \%$$

where

$\delta_y = -0.869558$ mm - max deflection
$L = 2.81299$ m - length
$1/\delta_{lim} = 0.004$ - ultimate relative deflection

$1/\delta_{lim}$ - ultimate relative deflection:

$$1/\delta_{lim} = 1/250$$

$$1/\delta_{lim} = 1/250 = 0.004$$

Design combination of loads No. 84, combination No. 12, fundamental combination (type I) :

N_{Ed}, kN	$M_{y,Ed}$, kN·m	$V_{z,Ed}$, kN	$M_{z,Ed}$, kN·m	$V_{y,Ed}$, kN	$M_{x,Ed}$, kN·m	$B_{w,Ed}$, kN·m^2	$T_{w,Ed}$, kN·m
-7.39	0	0	-20.17	14.6	0	0	0

$UF_{l.b.web}$ - utilization percentage for load-bearing capacity of structural element in local buckling of web:

$$UF_{l.b.web} = UF_{l.b.}$$

$$UF_{l.b.web} = 3.83315 \%$$

where

$UF_{l.b.} = 3.83315$ % - local buckling

$UF_{l.b.}$ - local buckling:

If criterion ($\Psi > -1$) is satisfied , then

$$UF_{l.b.} = d/t_w / (42 \cdot \varepsilon / (0.67 + 0.33 \cdot \Psi)) \cdot 100$$

that is *criterion (0.888091 > -1) is satisfied , then*

$UF_{l.b.} = 9.5/(42 \cdot 5.68299/(0.67 + 0.33 \cdot 0.888091)) \cdot 100 = 3.83315$ %

where

$d/t_w = 9.5$ - width-to-thickness ratios
$\varepsilon = 5.68299$ - coefficient depending on $\sigma_{com.Ed}$
$\Psi = 0.888091$ Table 5.2 - ratio of stresses

Ψ - ratio of stresses:

$\Psi = \sigma_2/\sigma_1$

$\Psi = 6.46207/7.27636 = 0.888091$ Table 5.2

where

$\sigma_2 = 6.46207$ MPa - design normal stress (compressive stress is positive)
$\sigma_1 = 7.27636$ MPa - design normal stress (compressive stress is positive)

d/t_w - width-to-thickness ratios:

$d/t_w = (b - 3 \cdot t)/t$

$d/t_w = (10 - 3 \cdot 0.8)/0.8 = 9.5$

where

$b = 10$ cm - short leg of angle
$t = 0.8$ cm - plate thickness

b - short leg of angle:

$b = B_f$

$b = 10$ cm

where

$B_f = 10$ cm - flange width

t - plate thickness:

$t = T_f$

$t = 0.8$ cm

where

$T_f = 0.8$ cm - flange thickness

ε - coefficient depending on $\sigma_{com.Ed}$:

$\varepsilon = (235/\sigma_{com.Ed})^{1/2}$

$\varepsilon = (235/7.27636)^{1/2} = 5.68299$

where

$\sigma_{com.Ed} = 7.27636$ MPa - max design compressive stress in element

Design combination of loads No. 84, combination No. 12, fundamental combination (type I) :

N_{Ed}, kN	$M_{y,Ed}$, kN·m	$V_{z,Ed}$, kN	$M_{z,Ed}$, kN·m	$V_{y,Ed}$, kN	$M_{x,Ed}$, kN·m	$B_{w,Ed}$, kN·m^2	$T_{w,Ed}$, kN·m
-7.39	0	0	-20.17	14.6	0	0	0

$UF_{l.b.flange}$ - utilization percentage for load-bearing capacity of structural element in local buckling of flange:

$$UF_{l.b.flange} = UF_{l.b.}$$

$$UF_{l.b.flange} = 4.05044\ \%$$

where

$UF_{l.b.} = 4.05044\ \%$ - local buckling

$UF_{l.b.}$ - local buckling:

$$UF_{l.b.} = d/t_w/(42\cdot\varepsilon)\cdot 100$$

$$UF_{l.b.} = 9.5/(42\cdot 5.58434)\cdot 100 = 4.05044\ \%$$

where

$d/t_w = 9.5$ - width-to-thickness ratios
$\varepsilon = 5.58434$ - coefficient depending on $\sigma_{com.Ed}$

d/t_w - width-to-thickness ratios:

$$d/t_w = (b - 3\cdot t)/t$$

$$d/t_w = (10 - 3\cdot 0.8)/0.8 = 9.5$$

where

$b = 10$ cm - short leg of angle
$t = 0.8$ cm - plate thickness

b - short leg of angle:

$$b = B_f$$

$$b = 10\ \text{cm}$$

where

$B_f = 10$ cm - flange width

t - plate thickness:

$$t = T_f$$

$$t = 0.8\ \text{cm}$$

where

$T_f = 0.8$ cm - flange thickness

ε - coefficient depending on $\sigma_{com.Ed}$:

$$\varepsilon = (235/\sigma_{com.Ed})^{1/2}$$

$$\varepsilon = (235/7.53571)^{1/2} = 5.58434$$

where

$\sigma_{com.Ed} = 7.53571$ MPa - max design compressive stress in element

Design combination of loads No. 15, combination No. 3, fundamental combination (type I) :

N_{Ed}, kN	$M_{y,Ed}$, kN·m	$V_{z,Ed}$, kN	$M_{z,Ed}$, kN·m	$V_{y,Ed}$, kN	$M_{x,Ed}$, kN·m	$B_{w,Ed}$, kN·m^2	$T_{w,Ed}$, kN·m
-4.147	0	0	1.134	3.544	0	0	0

UF_{ULS} - utilization percentage for load-bearing capacity of structural element by ultimate limit state:

$$UF_{ULS} = UF_{bending}$$

$$UF_{ULS} = 2.0625\ \%$$

where

$UF_{bending} = 2.0625\ \%$ - utilization percentage for load-bearing capacity of structural element in bending

Design combination of loads No. 85 :

N_{Ed}, kN	$M_{y,Ed}$, kN·m	$V_{z,Ed}$, kN	$M_{z,Ed}$, kN·m	$V_{y,Ed}$, kN	$M_{x,Ed}$, kN·m	$B_{w,Ed}$, kN·m^2	$T_{w,Ed}$, kN·m
0	-0.08426	0	1.67	0	0	0	0

UF_{SLS} - utilization percentage for load-bearing capacity of structural element by serviceability limit state:

$$UF_{SLS} = UF_{deflection}$$

$$UF_{SLS} = 7.72807\ \%$$

where

$UF_{deflection} = 7.72807\ \%$ - utilization percentage for load-bearing capacity of structural element by deflection

Design combination of loads No. 84, combination No. 12, fundamental combination (type I) :

N_{Ed}, kN	$M_{y,Ed}$, kN·m	$V_{z,Ed}$, kN	$M_{z,Ed}$, kN·m	$V_{y,Ed}$, kN	$M_{x,Ed}$, kN·m	$B_{w,Ed}$, kN·m^2	$T_{w,Ed}$, kN·m
-7.39	0	0	-20.17	14.6	0	0	0

$UF_{L.B.}$ - utilization percentage for load-bearing capacity of structural element in local buckling:

$$UF_{L.B.} = UF_{l.b.flange}$$

$$UF_{L.B.} = 4.05044\ \%$$

where

$UF_{l.b.flange} = 4.05044\ \%$ - utilization percentage for load-bearing capacity of structural element in local buckling of flange

Design combination of loads No. 13, combination No. 1, fundamental combination (type I) :

N_{Ed}, kN	$M_{y,Ed}$, kN·m	$V_{z,Ed}$, kN	$M_{z,Ed}$, kN·m	$V_{y,Ed}$, kN	$M_{x,Ed}$, kN·m	$B_{w,Ed}$, kN·m^2	$T_{w,Ed}$, kN·m
-3.655	-0.0727	0.07859	1.034	3.608	-0.003682	0	0

T_{cr} = 1100°C - critical temperature for element of steel structure :

Buckling resistance of a member in bending				
θ_{cr}, °C	$k_{y,\theta}$	$\gamma_{M,fi}$	$\gamma_{M,0}$	$\frac{M_{y,fi,Ed}}{\quad} + \frac{M_{z,fi,Ed}}{\quad} \le 1$

				$M_{y,fi,\theta,Rd}$ $M_{z,fi,\theta,Rd}$
100	1	1	1	0.0135777
200	1	1	1	0.0135777
300	1	1	1	0.0135777
400	1	1	1	0.0135777
500	0.78	1	1	0.0174073
600	0.47	1	1	0.0288886
700	0.23	1	1	0.0590333
800	0.11	1	1	0.123433
900	0.06	1	1	0.226294
1000	0.04	1	1	0.339441
1100	0.02	1	1	0.678883
Critical temperature due to bending, ° C				1100

Buckling of a member in one-plane bending								
$\theta_{cr,}$ °C	$k_{y,\theta}$	$k_{E,\theta}$	$\gamma_{M,fi}$	$\gamma_{M,0}$	$\lambda_{LT,\theta}$	φ_{θ}	$X_{LT,fi}$	$\frac{M_{y,fi,Ed}}{M_{b,fi,\theta,Rd}} + \frac{M_{z,fi,Ed}}{M_{b,fi,\theta,Rd}} \leq 1$
100	1	1	1	1	0.0974723	0.531688	0.948438	0.014278
200	1	0.9	1	1	0.102745	0.533673	0.94575	0.0143165
300	1	0.8	1	1	0.108977	0.536055	0.942582	0.0143623
400	1	0.7	1	1	0.116502	0.538983	0.93877	0.0144177
500	0.78	0.6	1	1	0.111136	0.536889	0.941487	0.0184335
600	0.47	0.31	1	1	0.120019	0.540371	0.936992	0.0307313
700	0.23	0.13	1	1	0.12965	0.544235	0.932139	0.0631096
800	0.11	0.09	1	1	0.10776	0.535587	0.9432	0.130485
900	0.06	0.0675	1	1	0.0918978	0.529619	0.951289	0.237288
1000	0.04	0.045	1	1	0.0918978	0.529619	0.951289	0.355932
1100	0.02	0.0225	1	1	0.0918978	0.529619	0.951289	0.711864
Critical temperature due to buckling, ° C								1100

Critical temperature, ° C	1100

Shear resistance				
$\theta_{cr,}$ °C	$k_{y,\theta}$	$\gamma_{M,0}$	$\gamma_{M,fi}$	$\frac{V_{fi,Ed}}{V_{fi,\theta,Rd}} \leq 1$
100	1	1	1	0.0063001
200	1	1	1	0.0063001
300	1	1	1	0.0063001
400	1	1	1	0.0063001
500	0.78	1	1	0.00807706
600	0.47	1	1	0.0134045
700	0.23	1	1	0.0273918
800	0.11	1	1	0.0572737
900	0.06	1	1	0.105002
1000	0.04	1	1	0.157503
1100	0.02	1	1	0.315005
Critical temperature, ° C				1100

The influence of Mx force on fire analysis is not considered.

Class - the highest class of cross-section determined in computation of cross-section:

$Class = Class_{out.el.}$

$Class = 1 = 1$ Table 5.2

where

$Class_{out.el.} = 1$ Table 5.2

$Class_{out.el.}$ - the highest class of outstand elements:

If criterion ($\sigma_1 \leq 0$ AND $\sigma_2 \leq 0$) is satisfied , then

that is *criterion (-14.0556 ≤ 0 AND -15.2826 ≤ 0) is satisfied* , then

$Class_{out.el.} = 1$ Table 5.2

where

$\sigma_1 = -14.0556$ MPa - design normal stress (compressive stress is positive)
$\sigma_2 = -15.2826$ MPa - design normal stress (compressive stress is positive)

Design combination of loads No. 3, combination No. 3, fundamental combination (type I) :

N_{Ed}, kN	$M_{y,Ed}$, kN·m	$V_{z,Ed}$, kN	$M_{z,Ed}$, kN·m	$V_{y,Ed}$, kN	$M_{x,Ed}$, kN·m	$B_{w,Ed}$, kN·m^2	$T_{w,Ed}$, kN·m
-3.885	0	0	2.278	0.8257	0	0	0

$UF_{bending}$ - utilization percentage for load-bearing capacity of structural element in bending:

$UF_{bending} = |(1 \cdot UF_{bending.y} + 0 \cdot UF_{bending.z} + UF_w)| \cdot 100$

$UF_{bending} = |(1 \cdot 0.041432 + 0 \cdot 0 + 0)| \cdot 100 = 4.1432$ %

where

$UF_{bending.y} = 0.041432$ %/100% - utilization fraction for load-bearing capacity of the structural element in bending
$UF_{bending.z} = 0$ %/100% - utilization fraction for load-bearing capacity of the structural element in bending
$UF_w = 0$ - component takes into account the reduction in load-bearing capacity of the section in case of warping

$UF_{bending.y}$ - utilization fraction for load-bearing capacity of the structural element in bending:

$UF_{bending.y} = |M_{y.Ed}| / (W_{pl.y} \cdot fy \cdot 10^{-3} / \gamma_{M0}) + \rho_z$

$UF_{bending.y} = |2.27776| / (169.156 \cdot 325 \cdot 10^{-3} / 1) + 0 = 0.041432$ %/100%

where

$M_{y.Ed} = 2.27776$ kNm - design bending moment
$W_{pl.y} = 169.156$ cm^3 - plastic section modulus
$fy = 325$ MPa - yield strength
$\gamma_{M0} = 1$ - partial safety factor in determining load-bearing capacity of cross-sections by strength regardless of class
$\rho_z = 0$ - reduction factor to determine reduced design value of the resistance to bending moment making allowance of the presence of shear force

$UF_{bending.z}$ - utilization fraction for load-bearing capacity of the structural element in bending:

$$UF_{bending.z} = |M_{z.Ed}|/(W_{pl.z} \cdot fy \cdot 10^{-3}/\gamma_{M0}) + \rho_y$$

$$UF_{bending.z} = |0|/(127.85 \cdot 325 \cdot 10^{-3}/1) + 0 = 0 \ \%/100\%$$

where

$M_{z.Ed} = 0$ kNm - design bending moment
$W_{pl.z} = 127.85$ cm^3 - plastic section modulus
$fy = 325$ MPa - yield strength
$\gamma_{M0} = 1$ - partial safety factor in determining load-bearing capacity of cross-sections by strength regardless of class
$\rho_y = 0$ - reduction factor to determine reduced design value of the resistance to bending moment making allowance of the presence of shear force

$M_{z.Ed}$ - design bending moment:

$$M_{z.Ed} = -M_{y.Ed}$$

$$M_{z.Ed} = -0 = 0 \text{ kNm}$$

where

$M_{y.Ed} = 0$ kNm - design bending moment

UF_w - component takes into account the reduction in load-bearing capacity of the section in case of warping:

$$UF_w = \sigma_w/(fy \cdot \gamma_{M0})$$

$$UF_w = 0/(325 \cdot 1) = 0$$

where

$\sigma_w = 0$ MPa - normal stress at point from warping
$fy = 325$ MPa - yield strength
$\gamma_{M0} = 1$ - partial safety factor in determining load-bearing capacity of cross-sections by strength regardless of class

σ_w - normal stress at point from warping:

$$\sigma_w = B_{w.Ed} \cdot w_i/I_w \cdot 10^5$$

$$\sigma_w = 0 \cdot 6.97863/629.682 \cdot 10^5 = 0 \text{ MPa}$$

where

$B_{w.Ed} = 0$ kNm^2 - design balue for bimoment
$w_i = 6.97863$ cm^2 - warping coordinate for the point (sign "-" for compressive stress)
$I_w = 629.682$ cm^6 - warping constant

Design combination of loads No. 5, combination No. 5, fundamental combination (type I) :

N_{Ed}, kN	$M_{y,Ed}$, kN·m	$V_{z,Ed}$, kN	$M_{z,Ed}$, kN·m	$V_{y,Ed}$, kN	$M_{x,Ed}$, kN·m	$B_{w,Ed}$, kN·m^2	$T_{w,Ed}$, kN·m
-2.495	-0.1826	0.131	1.588	1.028	-0.006137	0	0

UF_{shear} - utilization percentage for load-bearing capacity of structural element in shear:

If criterion (Class = 3 OR Class = 4) is not satisfied , then

$$UF_{shear} = UF_{shear.z}$$

that is *criterion (1 = 3 OR 1 = 4) is not satisfied , then*

$$UF_{shear} = 0.265526 \ \%$$

where

$UF_{shear.z}$ = *0.265526* % - utilization percentage for load-bearing capacity of structural element in shear
Class = *1* Table 5.2 - class of cross-section

Class - class of cross-section:

$$Class = Class_{out.el.}$$

$$Class = 1 = 1 \text{ Table 5.2}$$

where

$Class_{out.el.}$ = *1* Table 5.2

$Class_{out.el.}$ - the highest class of outstand elements:

If criterion ($\sigma_1 \leq 0$ AND $\sigma_2 \leq 0$) is satisfied , then

that is *criterion (-9.53396 ≤ 0 AND -11.579 ≤ 0) is satisfied* , then

$Class_{out.el.}$ = *1* Table 5.2

where

σ_1 = *-9.53396* MPa - design normal stress (compressive stress is positive)
σ_2 = *-11.579* MPa - design normal stress (compressive stress is positive)

$UF_{shear.z}$ - utilization percentage for load-bearing capacity of structural element in shear:

If criterion (Class = 3 OR Class = 4) is not satisfied , then

$$UF_{shear.z} = |V_{z.Ed}|/V_{pl.z.Rd} \cdot 100$$

that is *criterion (1 = 3 OR 1 = 4) is not satisfied , then*

$$UF_{shear.z} = |-1.02779|/387.076 \cdot 100 = 0.265526 \text{ \%}$$

where

$V_{z.Ed}$ = *-1.02779* kN - design shear force
$V_{pl.z.Rd}$ = *387.076* kN - design load-bearing capacity of the cross-section in shear for plastic analysis
Class = *1* Table 5.2 - class of cross-section

$V_{z.Ed}$ - design shear force:

$$V_{z.Ed} = -V_{y.Ed}$$

$$V_{z.Ed} = -1.02779 = -1.02779 \text{ kN}$$

where

$V_{y.Ed}$ = *1.02779* kN - design shear force

$V_{pl.z.Rd}$ - design load-bearing capacity of the cross-section in shear for plastic analysis:

$$V_{pl.z.Rd} = V_{pl.T.z.Rd}$$

$$V_{pl.z.Rd} = 387.076 \text{ kN}$$

where

$V_{pl.T.z.Rd}$ = *387.076* kN - reduced design load-bending capacity of cross-section in shear for the plastic analysis with account of torsion

$V_{pl.T.z.Rd}$ - reduced design load-bending capacity of cross-section in shear for the plastic analysis with account of torsion:

$$V_{pl.T.z.Rd} = V_{pl.z.Rd} \cdot (1 - \tau_{t.Ed} / (fy / 3^{1/2} / \gamma_{M0}))^{1/2}$$

$$V_{pl.T.z.Rd} = 387.106 \cdot (1 - 0.0293604 / (325 / 3^{1/2} / 1))^{1/2} = 387.076 \text{ kN}$$

where

$V_{pl.z.Rd} = 387.106$ kN - design load-bearing capacity of the cross-section in shear for plastic analysis
$\tau_{t.Ed} = 0.0293604$ MPa - design shear stress caused by torsional moment
$fy = 325$ MPa - yield strength
$\gamma_{M0} = 1$ - partial safety factor in determining load-bearing capacity of cross-sections by strength regardless of class

$V_{pl.z.Rd}$ - design load-bearing capacity of the cross-section in shear for plastic analysis:

$$V_{pl.z.Rd} = A_{v.z} \cdot fy \cdot 10^{-1} / (3^{1/2} \cdot \gamma_{M0})$$

$$V_{pl.z.Rd} = 20.6304 \cdot 325 \cdot 10^{-1} / (3^{1/2} \cdot 1) = 387.106 \text{ kN}$$

where

$A_{v.z} = 20.6304$ cm^2 - shear area of the cross-section along the local axis Z1*
$fy = 325$ MPa - yield strength
$\gamma_{M0} = 1$ - partial safety factor in determining load-bearing capacity of cross-sections by strength regardless of class

$\tau_{t.Ed}$ - design shear stress caused by torsional moment:

$$\tau_{t.Ed} = |\tau_{t.Ed}|$$

$$\tau_{t.Ed} = |0.0293604| = 0.0293604 \text{ MPa}$$

where

$\tau_{t.Ed} = 0.0293604$ MPa - design shear stress caused by torsional moment

$\tau_{t.Ed}$ - design shear stress caused by torsional moment:

$$\tau_{t.Ed} = |M_{x.Ed}| \cdot 10^3 / W_f$$

$$\tau_{t.Ed} = |-0.00613703| \cdot 10^3 / 209.024 = 0.0293604 \text{ MPa}$$

where

$M_{x.Ed} = -0.00613703$ kNm - design torsion moment
$W_f = 209.024$ cm^3 - torsional section modulus for flange

Design combination of loads No. 5, combination No. 5, fundamental combination (type I) :

N_{Ed}, kN	$M_{y,Ed}$, kN·m	$V_{z,Ed}$, kN	$M_{z,Ed}$, kN·m	$V_{y,Ed}$, kN	$M_{x,Ed}$, kN·m	$B_{w,Ed}$, kN·m^2	$T_{w,Ed}$, kN·m
-2.495	-0.1826	0.131	1.588	1.028	-0.006137	0	0

$UF_{torsion}$ - utilization percentage for load-bearing capacity of structural element in torsion:

$$UF_{torsion} = (\tau_{t.Ed} + \tau_{w.Ed}) / (fy / 3^{1/2} / \gamma_{M0}) \cdot 100$$

$$UF_{torsion} = (0.0293604 + 0) / (325 / 3^{1/2} / 1) \cdot 100 = 0.0156473 \text{ \%}$$

where

$\tau_{t.Ed} = 0.0293604$ MPa - design shear stress caused by torsional moment
$\tau_{w.Ed} = 0$ MPa - design shear stress in warping torsion

f_y = *325* MPa - yield strength
γ_{M0} = *1* - partial safety factor in determining load-bearing capacity of cross-sections by strength regardless of class

$\tau_{w.Ed}$ - design shear stress in warping torsion:

$\tau_{w.Ed} = |\tau_{w.Ed}|$

$\tau_{w.Ed} = |0| = 0$ MPa

where

$\tau_{w.Ed}$ = *0* MPa - design shear stress in warping torsion

Design combination of loads No. 1, combination No. 1, fundamental combination (type I) :

N_{Ed}, kN	$M_{y,Ed}$, kN·m	$V_{z,Ed}$, kN	$M_{z,Ed}$, kN·m	$V_{y,Ed}$, kN	$M_{x,Ed}$, kN·m	$B_{w,Ed}$, kN·m^2	$T_{w,Ed}$, kN·m
-3.393	-0.1095	0.07859	2.207	0.8892	-0.003682	0	0

$UF_{buckling}$ - utilization percentage for load-bearing capacity of structural element by overall stability:

$UF_{buckling} = UF_{buckl.about\ Z1}$

$UF_{buckling} = 3.10976$ %

where

$UF_{buckl.about\ Z1}$ = *3.10976* % - utilization percentage for load-bearing capacity of structural element for buckling relative to local axis Z1

$UF_{buckl.about\ Z1}$ - utilization percentage for load-bearing capacity of structural element for buckling relative to local axis Z1:

$UF_{buckl.about\ Z1} = UF_{buckl.about\ Y1}$

$UF_{buckl.about\ Z1} = 3.10976$ %

where

$UF_{buckl.about\ Y1}$ = *3.10976* % - utilization percentage for load-bearing capacity of structural element for buckling relative to local axis Y1*

$UF_{buckl.about\ Y1}$ - utilization percentage for load-bearing capacity of structural element for buckling relative to local axis Y1*:

If criterion ($I_y \geq I_z$) is satisfied and
criterion ($\overline{\lambda}_{LT} > \overline{\lambda}_{LT.0}$ AND $|M_{y.Ed}|/M_{y.cr} > \overline{\lambda}_{LT.0}^2$) is not satisfied , then

$UF_{buckl.about\ Y1} = (k_{yy} \cdot M_{y.Ed}/M_{b.Rd} + k_{yz} \cdot M_{z.Ed}/M_{b.Rd} - UF_w) \cdot 100$

that is *criterion (1008.13 ≥ 535.651) is satisfied and*
criterion (0.0974723 > 0.4 AND |2.20721|/5786.41 > 0.4^2) is not satisfied , then

$UF_{buckl.about\ Y1} = (0.745576 \cdot 2.20721/54.9758 + 0.441425 \cdot 0.10954/41.5513 - 0) \cdot 100 = 3.10976$ %

where

k_{yy} = *0.745576* - interaction factors
$M_{y.Ed}$ = *2.20721* kNm - design bending moment
$M_{b.Rd}$ = *54.9758* kNm - design load-bearing capacity of the element in lateral torsional buckling
k_{yz} = *0.441425* - interaction factors
$M_{z.Ed}$ = *0.10954* kNm - design bending moment
$M_{b.Rd}$ = *41.5513* kNm - design load-bearing capacity of the element in lateral torsional

buckling
UF_w = *0* - component takes into account the reduction in load-bearing capacity of the section in case of warping
I_y = *1008.13* cm^4 - second moment of area about y-y axis
I_z = *535.651* cm^4 - second moment of area about z-z axis
$\overline{\lambda}_{LT}$ = *0.0974723* - non-dimensional slenderness for lateral-torsional buckling in elastic stage
$\overline{\lambda}_{LT.0}$ = *0.4* - rectilinear fragment of lateral torsional buckling curve for rolled sections
$M_{y.cr}$ = *5786.41* kNm - elastic critical moment for lateral-torsional buckling

$\overline{\lambda}_{LT}$ - non-dimensional slenderness for lateral-torsional buckling in elastic stage:

$$\overline{\lambda}_{LT} = (W_y \cdot fy \cdot 10^{-3}/M_{y.cr})^{1/2}$$

$$\overline{\lambda}_{LT} = (169.156 \cdot 325 \cdot 10^{-3}/5786.41)^{1/2} = 0.0974723$$

where

W_y = *169.156* cm^3 - section modulus
fy = *325* MPa - yield strength
$M_{y.cr}$ = *5786.41* kNm - elastic critical moment for lateral-torsional buckling

W_y - section modulus:

If criterion (Class = 1 OR Class = 2) is satisfied , then

$$W_y = W_{pl.y}$$

that is *criterion (1 = 1 OR 1 = 2) is satisfied , then*

$$W_y = 169.156 \text{ cm}^3$$

where

$W_{pl.y}$ = *169.156* cm^3 - plastic section modulus
Class = *1* Table 5.2 - class of cross-section

Class - class of cross-section:

$$\text{Class} = \text{Class}_{out.el.}$$

$$\text{Class} = 1 = 1 \text{ Table } 5.2$$

where

$\text{Class}_{out.el.}$ = *1* Table 5.2

$M_{y.cr}$ - elastic critical moment for lateral-torsional buckling:

$$M_{y.cr} = C_1 \cdot \Pi^2 \cdot E \cdot I_z \cdot 10^{-8}/L_z^2 \cdot ((k_z^2/kw^2 \cdot I_w \cdot 10^{-12}/(I_z \cdot 10^{-8}) + L_z^2 \cdot G \cdot I_t \cdot 10^{-8}/(3.14159^2 \cdot E \cdot I_z \cdot 10^{-8}) + (C_2 \cdot z_g \cdot 10^{-2} - C_3 \cdot z_j \cdot 10^{-2}) \cdot (C_2 \cdot z_g \cdot 10^{-2} - C_3 \cdot z_j \cdot 10^{-2}))^{1/2} - (C_2 \cdot z_g \cdot 10^{-2} - C_3 \cdot z_j \cdot 10^{-2})) \cdot 10^3$$

$$M_{y.cr} = 2.57 \cdot 3.14159^2 \cdot 210000 \cdot 535.651 \cdot 10^{-8}/1^2 \cdot ((1^2/1^2 \cdot 629.682 \cdot 10^{-12}/(535.651 \cdot 10^{-8}) + 1^2 \cdot 81000 \cdot 1208.38 \cdot 10^{-8}/(3.14159^2 \cdot 210000 \cdot 535.651 \cdot 10^{-8}) + (1.55 \cdot 7.5 \cdot 10^{-2} - 0.75 \cdot 0 \cdot 10^{-2}) \cdot (1.55 \cdot 7.5 \cdot 10^{-2} - 0.75 \cdot 0 \cdot 10^{-2}))^{1/2} - (1.55 \cdot 7.5 \cdot 10^{-2} - 0.75 \cdot 0 \cdot 10^{-2})) \cdot 10^3 = 5786.41 \text{ kNm}$$

where

C_1 = *2.57* - factor
Π = *3.14159* - mathematical constant
E = *210000* MPa - modulus of elasticity
I_z = *535.651* cm^4 - second moment of area about z-z axis
L_z = *1* m - buckling length
k_z = *1* - factor for considering type of restraints at the end of the element from rotation about axis Z1-Z1*
kw = *1* - effective length factor for warping

I_w = *629.682* cm^6 - warping constant
G = *81000* MPa - shear modulus
I_t = *1208.38* cm^4 - torsional constant
C_2 = *1.55* - factor
z_g = *7.5* cm - coordinate of the point where external load is applied to relative to the shear (flexural) centre of the section
C_3 = *0.75* - factor
z_j = *0* cm - monosymmetry parameter

k_{yy} - interaction factors:

If criterion (Class = 3 OR Class = 4) is not satisfied , then

$$k_{yy} = C_{my} \cdot (1 + (\overline{\lambda}_y - 0.2) \cdot |N_{Ed}| / (\chi_y \cdot N_{Rk} / \gamma_{M1}))$$

that is *criterion (1 = 3 OR 1 = 4) is not satisfied , then*

$$k_{yy} = 0.745576 \cdot (1 + (0.117065 - 0.2) \cdot |0| / (1 \cdot 1145.38/1)) = 0.745576$$

where

C_{my} = *0.745576* - factor
$\overline{\lambda}_y$ = *0.117065* - non-dimensional slenderness of the member for buckling
N_{Ed} = *0* kN - design axial force
χ_y = *1* - reduction factor for the buckling mode corresponding to the buckling curve, about Y1-Y1*
N_{Rk} = *1145.38* kN - characteristic value for load-bearing capacity in compression
γ_{M1} = *1* - partial safety factor in determining load-bearing capacity of element in buckling
Class = *1* Table 5.2 - class of cross-section

Class - class of cross-section:

$$Class = Class_{out.el.}$$

$$Class = 1 = 1 \text{ Table } 5.2$$

where

$Class_{out.el.}$ = *1* Table 5.2

C_{my} - factor:

$$C_{my} = 0.2 + 0.8 \cdot \alpha_s$$

$$C_{my} = 0.2 + 0.8 \cdot 0.681971 = 0.745576$$

where

α_s = *0.681971* - factor

$\overline{\lambda}_y$ - non-dimensional slenderness of the member for buckling:

$$\overline{\lambda}_y = (fy \cdot A \cdot 10^{-1} / N_{cr})^{1/2}$$

$$\overline{\lambda}_y = (325 \cdot 35.2425 \cdot 10^{-1} / 83578.4)^{1/2} = 0.117065$$

where

fy = *325* MPa - yield strength
A = *35.2425* cm^2 - area of gross cross-section
N_{cr} = *83578.4* kN - elastic critical force for the relevant buckling mode

N_{Rk} - characteristic value for load-bearing capacity in compression:

$$N_{Rk} = fy \cdot A \cdot 10^{-1}$$

$$N_{Rk} = 325 \cdot 35.2425 \cdot 10^{-1} = 1145.38 \text{ kN}$$

where

$fy = 325$ MPa - yield strength
$A = 35.2425$ cm^2 - area of gross cross-section

$M_{b.Rd}$ - design load-bearing capacity of the element in lateral torsional buckling:

If criterion ($I_y \geq I_z$) is satisfied and
criterion ($\overline{\lambda}_{LT} > \overline{\lambda}_{LT.0}$ AND $|M_{y.Ed}|/M_{y.cr} > \overline{\lambda}_{LT.0}^2$) is not satisfied , then

$$M_{b.Rd} = W_y \cdot 10^{-3} \cdot fy / \gamma_{M1}$$

that is *criterion (1008.13 ≥ 535.651) is satisfied and*
criterion (0.0974723 > 0.4 AND |2.20721|/5786.41 > 0.4^2) is not satisfied , then

$$M_{b.Rd} = 169.156 \cdot 10^{-3} \cdot 325/1 = 54.9758 \text{ kNm}$$

where

$W_y = 169.156$ cm^3 - section modulus
$fy = 325$ MPa - yield strength
$\gamma_{M1} = 1$ - partial safety factor in determining load-bearing capacity of element in buckling
$I_y = 1008.13$ cm^4 - second moment of area about y-y axis
$I_z = 535.651$ cm^4 - second moment of area about z-z axis
$\overline{\lambda}_{LT} = 0.0974723$ - non-dimensional slenderness for lateral-torsional buckling in elastic stage
$\overline{\lambda}_{LT.0} = 0.4$ - rectilinear fragment of lateral torsional buckling curve for rolled sections
$M_{y.Ed} = 2.20721$ kNm - design bending moment
$M_{y.cr} = 5786.41$ kNm - elastic critical moment for lateral-torsional buckling

k_{yz} - interaction factors:

If criterion (Class = 3 OR Class = 4) is not satisfied , then

$$k_{yz} = 0.6 \cdot k_{zz}$$

that is *criterion (1 = 3 OR 1 = 4) is not satisfied , then*

$$k_{yz} = 0.6 \cdot 0.735708 = 0.441425$$

where

$k_{zz} = 0.735708$ - interaction factors
Class = 1 Table 5.2 - class of cross-section

k_{zz} - interaction factors:

$$k_{zz} = C_{mz} \cdot (1 + (\overline{\lambda}_z - 0.2) \cdot |N_{Ed}| / (\chi_z \cdot N_{Rk} / \gamma_{M1}))$$

$$k_{zz} = 0.735708 \cdot (1 + (0.321199 - 0.2) \cdot |0| / (0.972488 \cdot 1145.38/1)) = 0.735708$$

where

$C_{mz} = 0.735708$ - factor
$\overline{\lambda}_z = 0.321199$ - non-dimensional slenderness of the member for buckling
$N_{Ed} = 0$ kN - design axial force
$\chi_z = 0.972488$ - reduction factor for the buckling mode corresponding to the buckling curve, about Z1-Z1*
$N_{Rk} = 1145.38$ kN - characteristic value for load-bearing capacity in compression
$\gamma_{M1} = 1$ - partial safety factor in determining load-bearing capacity of element in buckling

C_{mz} - factor:

$$C_{mz} = 0.2 + 0.8 \cdot \alpha_s$$

$$C_{mz} = 0.2 + 0.8 \cdot 0.669635 = 0.735708$$

where

$\alpha_s = 0.669635$ - factor

$\overline{\lambda}_z$ - non-dimensional slenderness of the member for buckling:

$$\overline{\lambda}_z = (fy \cdot A \cdot 10^{-1} / N_{cr})^{1/2}$$

$$\overline{\lambda}_z = (325 \cdot 35.2425 \cdot 10^{-1} / 11102)^{1/2} = 0.321199$$

where

$fy = 325$ MPa - yield strength
$A = 35.2425$ cm^2 - area of gross cross-section
$N_{cr} = 11102$ kN - elastic critical force for the relevant buckling mode

χ_z - reduction factor for the buckling mode corresponding to the buckling curve, about Z1-Z1*:

$$\chi_z = 1/(\Phi + (\Phi^2 - \overline{\lambda}_z^2)^{1/2})$$

$$\chi_z = 1/(0.56431 + (0.56431^2 - 0.321199^2)^{1/2}) = 0.972488$$

where

$\Phi = 0.56431$ - value to determine the reduction factor χ
$\overline{\lambda}_z = 0.321199$ - non-dimensional slenderness of the member for buckling

Φ - value to determine the reduction factor χ:

$$\Phi = 0.5 \cdot (1 + \alpha \cdot (\overline{\lambda}_z - 0.2) + \overline{\lambda}_z^2)$$

$$\Phi = 0.5 \cdot (1 + 0.21 \cdot (0.321199 - 0.2) + 0.321199^2) = 0.56431$$

where

$\alpha = 0.21$ - imperfection factor
$\overline{\lambda}_z = 0.321199$ - non-dimensional slenderness of the member for buckling

$M_{z.Ed}$ - design bending moment:

$$M_{z.Ed} = -M_{y.Ed}$$

$$M_{z.Ed} = --0.10954 = 0.10954 \text{ kNm}$$

where

$M_{y.Ed} = -0.10954$ kNm - design bending moment

$M_{b.Rd}$ - design load-bearing capacity of the element in lateral torsional buckling:

If criterion ($I_y \geq I_z$) is satisfied and
criterion ($\overline{\lambda}_{LT} > \overline{\lambda}_{LT.0}$ AND $|M_{y.Ed}|/M_{y.cr} > \overline{\lambda}_{LT.0}^2$) is not satisfied , then

$$M_{b.Rd} = W_z \cdot 10^{-3} \cdot fy / \gamma_{M1}$$

that is *criterion (1008.13 ≥ 535.651) is satisfied and*
criterion (0.0974723 > 0.4 AND |2.20721|/5786.41 > 0.4^2) is not satisfied , then

$$M_{b.Rd} = 127.85 \cdot 10^{-3} \cdot 325/1 = 41.5513 \text{ kNm}$$

where

W_z = *127.85* cm^3 - section modulus
fy = *325* MPa - yield strength
γ_{M1} = *1* - partial safety factor in determining load-bearing capacity of element in buckling
I_y = *1008.13* cm^4 - second moment of area about y-y axis
I_z = *535.651* cm^4 - second moment of area about z-z axis
λ_{LT} = *0.0974723* - non-dimensional slenderness for lateral-torsional buckling in elastic stage
$\lambda_{LT.0}$ = *0.4* - rectilinear fragment of lateral torsional buckling curve for rolled sections
$M_{y.Ed}$ = *2.20721* kNm - design bending moment
$M_{y.cr}$ = *5786.41* kNm - elastic critical moment for lateral-torsional buckling

W_z - section modulus:

If criterion (Class = 1 OR Class = 2) is satisfied , then

$$W_z = W_{pl.z}$$

that is *criterion (1 = 1 OR 1 = 2) is satisfied , then*

$$W_z = 127.85 \text{ cm}^3$$

where

$W_{pl.z}$ = *127.85* cm^3 - plastic section modulus
Class = *1* Table 5.2 - class of cross-section

UF_w - component takes into account the reduction in load-bearing capacity of the section in case of warping:

$$UF_w = \sigma_w/(fy \cdot \gamma_{M0})$$

$$UF_w = 0/(325 \cdot 1) = 0$$

where

σ_w = *0* MPa - normal stress at point from warping
fy = *325* MPa - yield strength
γ_{M0} = *1* - partial safety factor in determining load-bearing capacity of cross-sections by strength regardless of class

σ_w - normal stress at point from warping:

$$\sigma_w = B_{w.Ed} \cdot w_i / I_w \cdot 10^5$$

$$\sigma_w = 0 \cdot -6.97863/629.682 \cdot 10^5 = 0 \text{ MPa}$$

where

$B_{w.Ed}$ = *0* kNm^2 - design balue for bimoment
w_i = *-6.97863* cm^2 - warping coordinate for the point (sign "-" for compressive stress)
I_w = *629.682* cm^6 - warping constant

Design combination of loads No. 84, combination No. 12, fundamental combination (type I) :

N_{Ed}, kN	$M_{y,Ed}$, kN·m	$V_{z,Ed}$, kN	$M_{z,Ed}$, kN·m	$V_{y,Ed}$, kN	$M_{x,Ed}$, kN·m	$B_{w,Ed}$, kN·m^2	$T_{w,Ed}$, kN·m
-7.39	0	0	-20.17	14.6	0	0	0

$UF_{l.b.web}$ - utilization percentage for load-bearing capacity of structural element in local buckling of web:

$UF_{l.b.web} = UF_{l.b.}$

$UF_{l.b.web} = 5.61535\ \%$

where

$UF_{l.b.} = 5.61535\ \%$ - local buckling

$UF_{l.b.}$ - local buckling:

If criterion ($\Psi > -1$) is satisfied , then

$UF_{l.b.} = d/t_w/(42 \cdot \varepsilon/(0.67 + 0.33 \cdot \Psi)) \cdot 100$

that is *criterion (0.919713 > -1) is satisfied , then*

$UF_{l.b.} = 9.5/(42 \cdot 3.92135/(0.67 + 0.33 \cdot 0.919713)) \cdot 100 = 5.61535\ \%$

where

$d/t_w = 9.5$ - width-to-thickness ratios
$\varepsilon = 3.92135$ - coefficient depending on $\sigma_{com.Ed}$
$\Psi = 0.919713$ Table 5.2 - ratio of stresses

Ψ - ratio of stresses:

$\Psi = \sigma_2/\sigma_1$

$\Psi = 14.0556/15.2826 = 0.919713$ Table 5.2

where

$\sigma_2 = 14.0556$ MPa - design normal stress (compressive stress is positive)
$\sigma_1 = 15.2826$ MPa - design normal stress (compressive stress is positive)

d/t_w - width-to-thickness ratios:

$d/t_w = (b - 3 \cdot t)/t$

$d/t_w = (10 - 3 \cdot 0.8)/0.8 = 9.5$

where

$b = 10$ cm - short leg of angle
$t = 0.8$ cm - plate thickness

b - short leg of angle:

$b = B_f$

$b = 10$ cm

where

$B_f = 10$ cm - flange width

t - plate thickness:

$t = T_f$

$t = 0.8$ cm

where

$T_f = 0.8$ cm - flange thickness

ε - coefficient depending on $\sigma_{com.Ed}$:

$\varepsilon = (235/\sigma_{com.Ed})^{½}$

$\varepsilon = (235/15.2826)^{½} = 3.92135$

where

$\sigma_{com.Ed} = 15.2826$ MPa - max design compressive stress in element

Design combination of loads No. 84, combination No. 12, fundamental combination (type I) :

N_{Ed}, kN	$M_{y,Ed}$, kN·m	$V_{z,Ed}$, kN	$M_{z,Ed}$, kN·m	$V_{y,Ed}$, kN	$M_{x,Ed}$, kN·m	$B_{w,Ed}$, kN·m^2	$T_{w,Ed}$, kN·m
-7.39	0	0	-20.17	14.6	0	0	0

$UF_{l.b.flange}$ - utilization percentage for load-bearing capacity of structural element in local buckling of flange:

$UF_{l.b.flange} = UF_{l.b.}$

$UF_{l.b.flange} = 5.74082$ %

where

$UF_{l.b.} = 5.74082$ % - local buckling

$UF_{l.b.}$ - local buckling:

$UF_{l.b.} = d/t_w/(42 \cdot \varepsilon) \cdot 100$

$UF_{l.b.} = 9.5/(42 \cdot 3.94004) \cdot 100 = 5.74082$ %

where

$d/t_w = 9.5$ - width-to-thickness ratios
$\varepsilon = 3.94004$ - coefficient depending on $\sigma_{com.Ed}$

d/t_w - width-to-thickness ratios:

$d/t_w = (b - 3 \cdot t)/t$

$d/t_w = (10 - 3 \cdot 0.8)/0.8 = 9.5$

where

$b = 10$ cm - short leg of angle
$t = 0.8$ cm - plate thickness

b - short leg of angle:

$b = B_f$

$b = 10$ cm

where

$B_f = 10$ cm - flange width

t - plate thickness:

$t = T_f$

$t = 0.8$ cm

where

$T_f = 0.8$ cm - flange thickness

ε - coefficient depending on $\sigma_{com.Ed}$:

$\varepsilon = (235/\sigma_{com.Ed})^{1/2}$

$\varepsilon = (235/15.1379)^{1/2} = 3.94004$

where

$\sigma_{com.Ed} = 15.1379$ MPa - max design compressive stress in element

Design combination of loads No. 3, combination No. 3, fundamental combination (type I) :

N_{Ed}, kN	$M_{y,Ed}$, kN·m	$V_{z,Ed}$, kN	$M_{z,Ed}$, kN·m	$V_{y,Ed}$, kN	$M_{x,Ed}$, kN·m	$B_{w,Ed}$, kN·m^2	$T_{w,Ed}$, kN·m
-3.885	0	0	2.278	0.8257	0	0	0

UF_{ULS} - utilization percentage for load-bearing capacity of structural element by ultimate limit state:

$UF_{ULS} = UF_{bending}$

$UF_{ULS} = 4.1432$ %

where

$UF_{bending} = 4.1432$ % - utilization percentage for load-bearing capacity of structural element in bending

Design combination of loads No. 84, combination No. 12, fundamental combination (type I) :

N_{Ed}, kN	$M_{y,Ed}$, kN·m	$V_{z,Ed}$, kN	$M_{z,Ed}$, kN·m	$V_{y,Ed}$, kN	$M_{x,Ed}$, kN·m	$B_{w,Ed}$, kN·m^2	$T_{w,Ed}$, kN·m
-7.39	0	0	-20.17	14.6	0	0	0

$UF_{L.B.}$ - utilization percentage for load-bearing capacity of structural element in local buckling:

$UF_{L.B.} = UF_{l.b.flange}$

$UF_{L.B.} = 5.74082$ %

where

$UF_{l.b.flange} = 5.74082$ % - utilization percentage for load-bearing capacity of structural element in local buckling of flange

Design combination of loads No. 1, combination No. 1, fundamental combination (type I) :

N_{Ed}, kN	$M_{y,Ed}$, kN·m	$V_{z,Ed}$, kN	$M_{z,Ed}$, kN·m	$V_{y,Ed}$, kN	$M_{x,Ed}$, kN·m	$B_{w,Ed}$, kN·m^2	$T_{w,Ed}$, kN·m
-3.393	-0.1095	0.07859	2.207	0.8892	-0.003682	0	0

T_{cr} = 1035°C - critical temperature for element of steel structure :

Buckling resistance of a member in bending				
θ_{cr}, °C	$k_{y,\theta}$	$\gamma_{M,fi}$	$\gamma_{M,0}$	$\frac{M_{y,fi,Ed}}{M_{y,fi,\theta,Rd}} + \frac{M_{z,fi,Ed}}{M_{z,fi,\theta,Rd}} \le 1$
100	1	1	1	0.0281416

200	1	1	1	0.0281416
300	1	1	1	0.0281416
400	1	1	1	0.0281416
500	0.78	1	1	0.036079
600	0.47	1	1	0.0598758
700	0.23	1	1	0.122355
800	0.11	1	1	0.255833
900	0.06	1	1	0.469027
1000	0.04	1	1	0.703541
1100	0.02	1	1	1.40708
Critical temperature due to bending, ° C				1042.14

Buckling of a member in one-plane bending								
$\theta_{cr,}$ °C	$k_{y,\theta}$	$k_{E,\theta}$	$\gamma_{M,fi}$	$\gamma_{M,0}$	$\lambda_{LT,\theta}$	φ_{θ}	$X_{LT,fi}$	$\frac{M_{y,fi,Ed}}{M_{b,fi,\theta,Rd}} + \frac{M_{z,fi,Ed}}{M_{b,fi,\theta,Rd}} \leq 1$
100	1	1	1	1	0.0974723	0.531688	0.948438	0.0296145
200	1	0.9	1	1	0.102745	0.533673	0.94575	0.0296957
300	1	0.8	1	1	0.108977	0.536055	0.942582	0.0297919
400	1	0.7	1	1	0.116502	0.538983	0.93877	0.0299086
500	0.78	0.6	1	1	0.111136	0.536889	0.941487	0.0382376
600	0.47	0.31	1	1	0.120019	0.540371	0.936992	0.0637516
700	0.23	0.13	1	1	0.12965	0.544235	0.932139	0.130929
800	0.11	0.09	1	1	0.10776	0.535587	0.9432	0.270665
900	0.06	0.0675	1	1	0.0918978	0.529619	0.951289	0.49215
1000	0.04	0.045	1	1	0.0918978	0.529619	0.951289	0.738224
1100	0.02	0.0225	1	1	0.0918978	0.529619	0.951289	1.47645
Critical temperature due to buckling, ° C								1035.46

Critical temperature, ° C	1035.46

Shear resistance				
$\theta_{cr,}$ °C	$k_{y,\theta}$	$\gamma_{M,0}$	$\gamma_{M,fi}$	$\frac{V_{fi,Ed}}{V_{fi,\theta,Rd}} \leq 1$
100	1	1	1	0.00173478
200	1	1	1	0.00173478
300	1	1	1	0.00173478
400	1	1	1	0.00173478
500	0.78	1	1	0.00222408
600	0.47	1	1	0.00369102
700	0.23	1	1	0.00754252
800	0.11	1	1	0.0157707
900	0.06	1	1	0.028913
1000	0.04	1	1	0.0433695
1100	0.02	1	1	0.086739
Critical temperature, ° C				1100

The influence of Mx force on fire analysis is not considered.

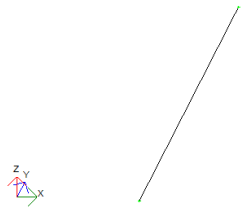

Diagram N, tonf(metric)



Max=-0.25442
Min=-0.76153

Diagram Mx , tonf(metric) * m

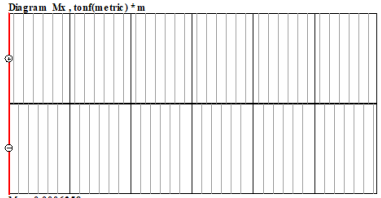

Max=0.0006258
Min=-0.0006258

Diagram My , tonf(metric) * m

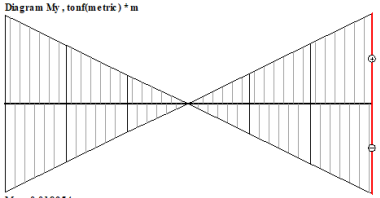

Max=0.018954
Min=-0.018954

Diagram Qz , tonf(metric)

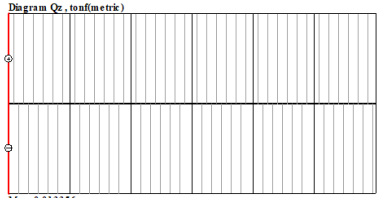

Max=0.013356
Min=-0.013356

Diagram Mz , tonf(metric) * m

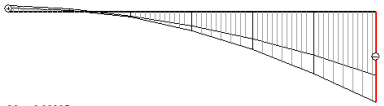

Max=0.23227
Min=-2.9177

Diagram Qy tonf(metric)

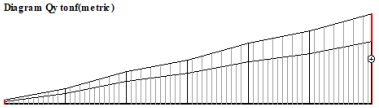

Max=2.1438
Min=0.071593

Problem code: V132
Structural element SB24

Element type	Reliability factors			Effective lengths, m		Deflection
	γm0	γm1	γm2	about Z1	about Y1	(denominator)
beam	1.00	1.00	1.25	0.50	1.00	250
	Limitations, cm				Limitations	step of stiff./
Ymax	Zmax	Ymin	Zmin	tw min	for class	battens, m
300.00	300.00	1.00	1.00	0.10	1,2,3	2.81

Results of the check (EN1993-1-1:2005/2011)

Section	1. Structural tubing RHS150*100*8
Shape	RHS150*100*8;
Material	S355
Metal tables	Structural tubing Tekla.

Estimation of ultimate limit state

bending	shear	von Mises eq. stress	lat.-tors. buckl.	web buckling	flange buckling
51.6	5.4	0.0	38.9	20.3	20.3
Class of cross-sections,	Temperature Tcrit.,	step of stiff./	summary utilization %%(ULS)		SLS
max. by element	degrees Celsius	battens	Resistance	Stability	deflection
1	627.9	no	51.6	38.9	25.9

Check	Determinative forces												
	No.	FE	Sect.	N, t	My, t*m	Qz, t	Mz, t*m	Qy, t	Mx, t*m	Bw, t*m*m	Tw, t*m	^ combination	Class
bending	75	32	7	-0.594	0.000	0.000	-2.892	2.137	0.000	0.000	0.000	3	1
shear	73	32	7	-0.544	0.011	0.008	-2.918	2.144	-0.000	0.000	0.000	1	1
von Mises eq. stress	---	---	---	---	---	---	---	---	---	---	---	---	---
lat.-tors. buckl.	73	32	7	-0.544	0.011	0.008	-2.918	2.144	-0.000	0.000	0.000	1	1
local buckling	74	32	7	-0.544	-0.011	-0.008	-2.918	2.144	0.000	0.000	0.000	2	1
Class max.	74	32	7	-0.544	-0.011	-0.008	-2.918	2.144	0.000	0.000	0.000	2	1
Temper. Tcrit	73	32	7	-0.544	0.011	0.008	-2.918	2.144	-0.000	0.000	0.000	1	1

Persirengimo modulio su technine patalpa pamatai

“Persirengimo modulio su technine patalpa pamatai”

LC1 - self-weight;
LC -2 - permanent loads;
LC -4 - variavle loads;
L C-5 - snow;
LC-6- wind loads +X;
LC-7- wind loads -X;
LC-8- wind loads +Y;
LC-9- wind loads -Y;

LC-1

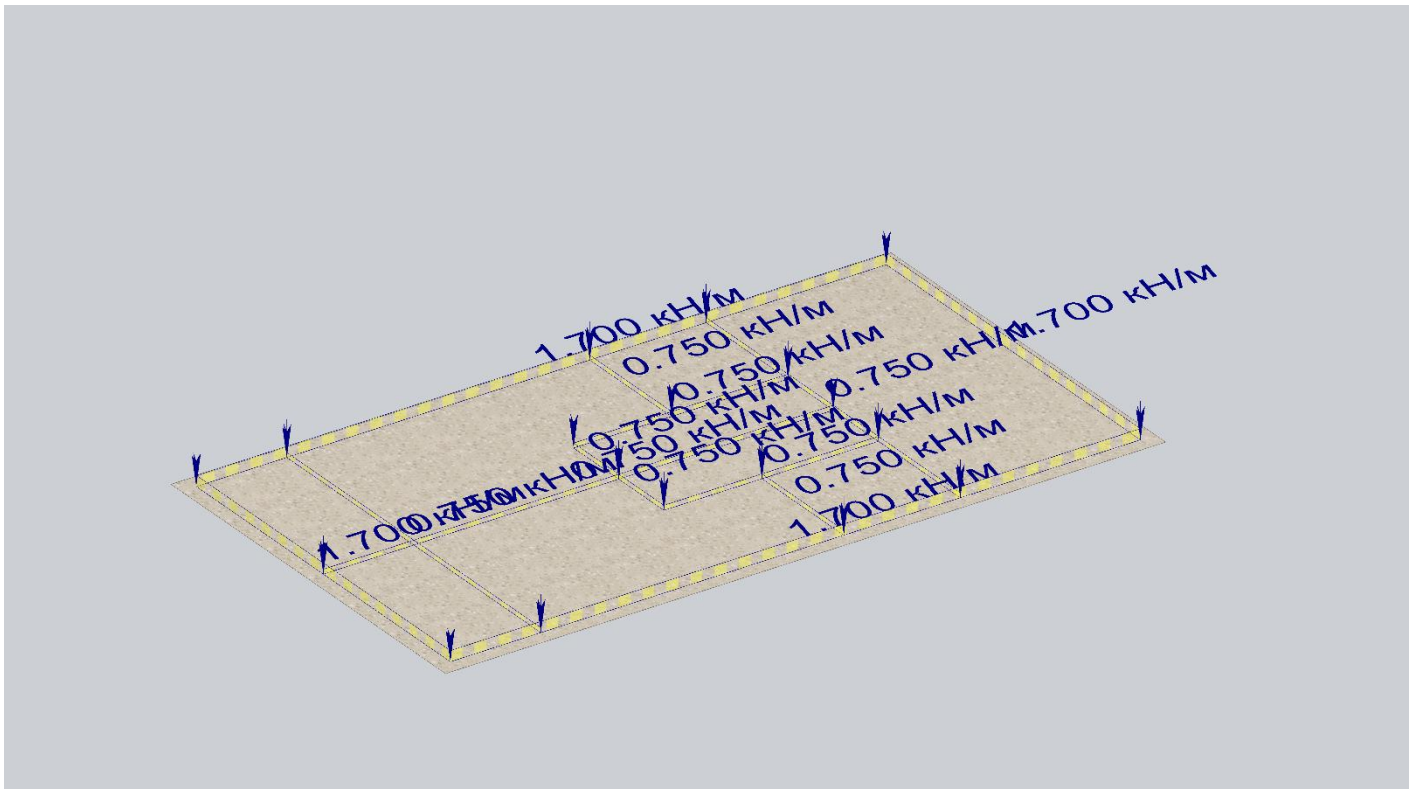
1.700 кН/м
0.750 кН/м
0.750 кН/м
0.750 кН/м
0.750 кН/м
0.750 кН/м
0.750 кН/м
0.750 кН/м
0.750 кН/м
1.700 кН/м
1.700 кН/м

LC-2

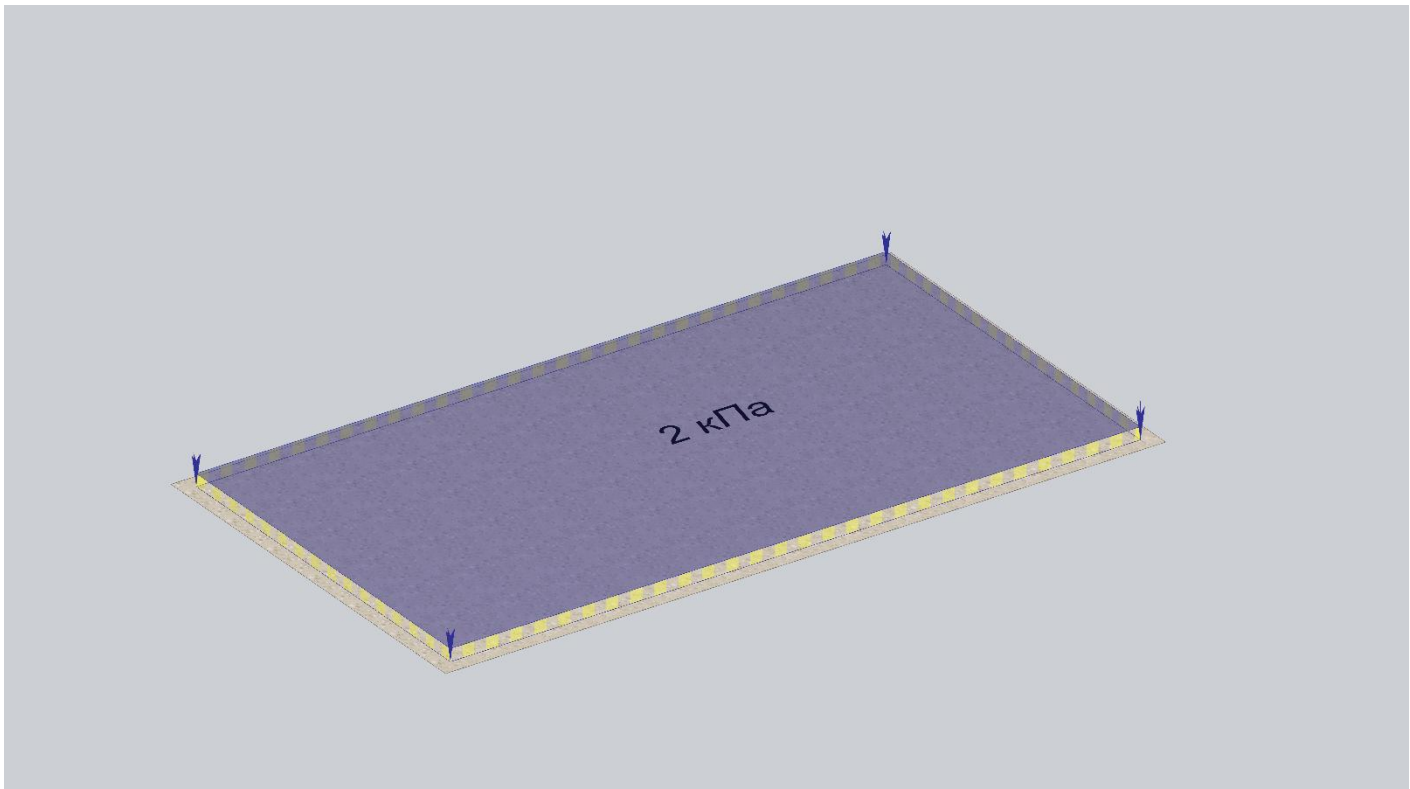
2 кПа

LC-4

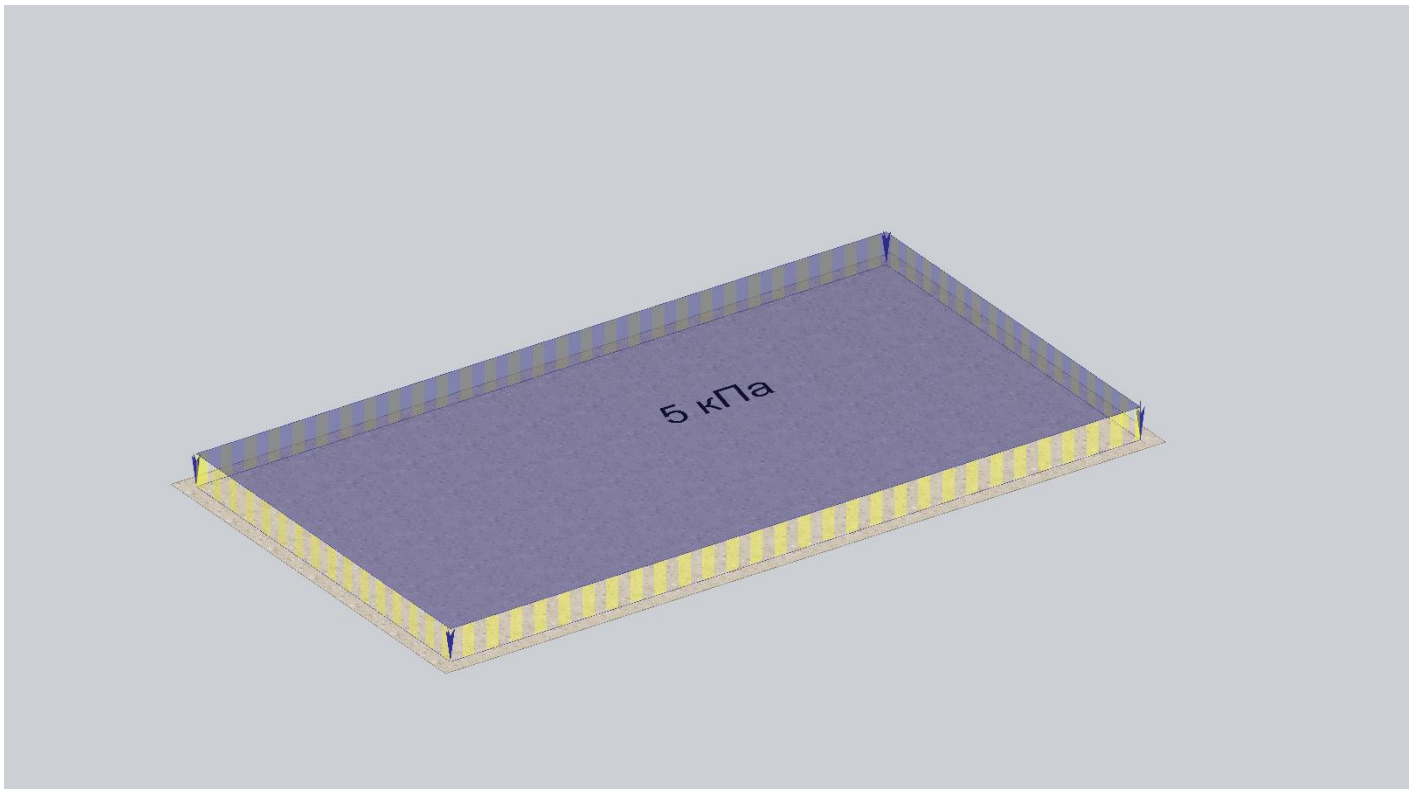

LC-5

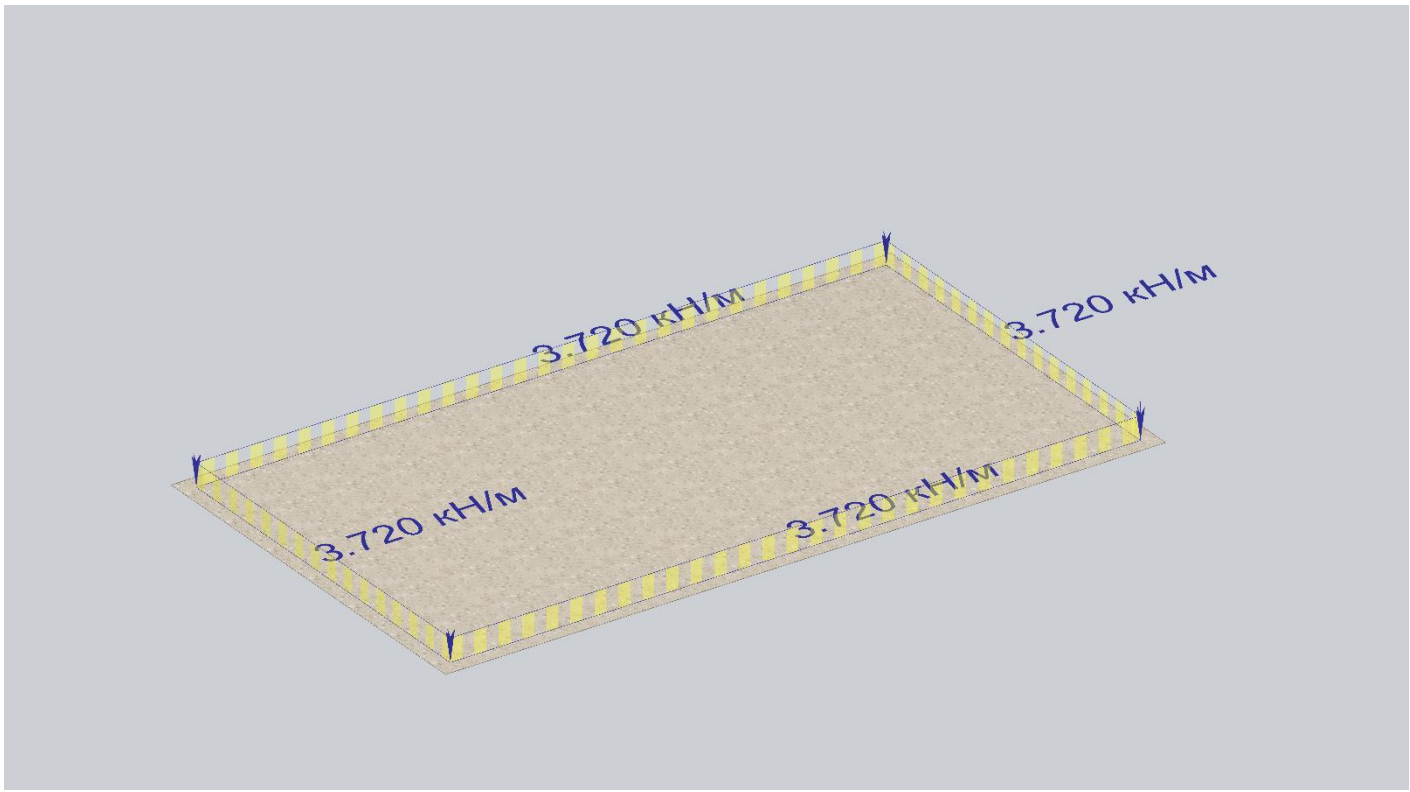

LC-6

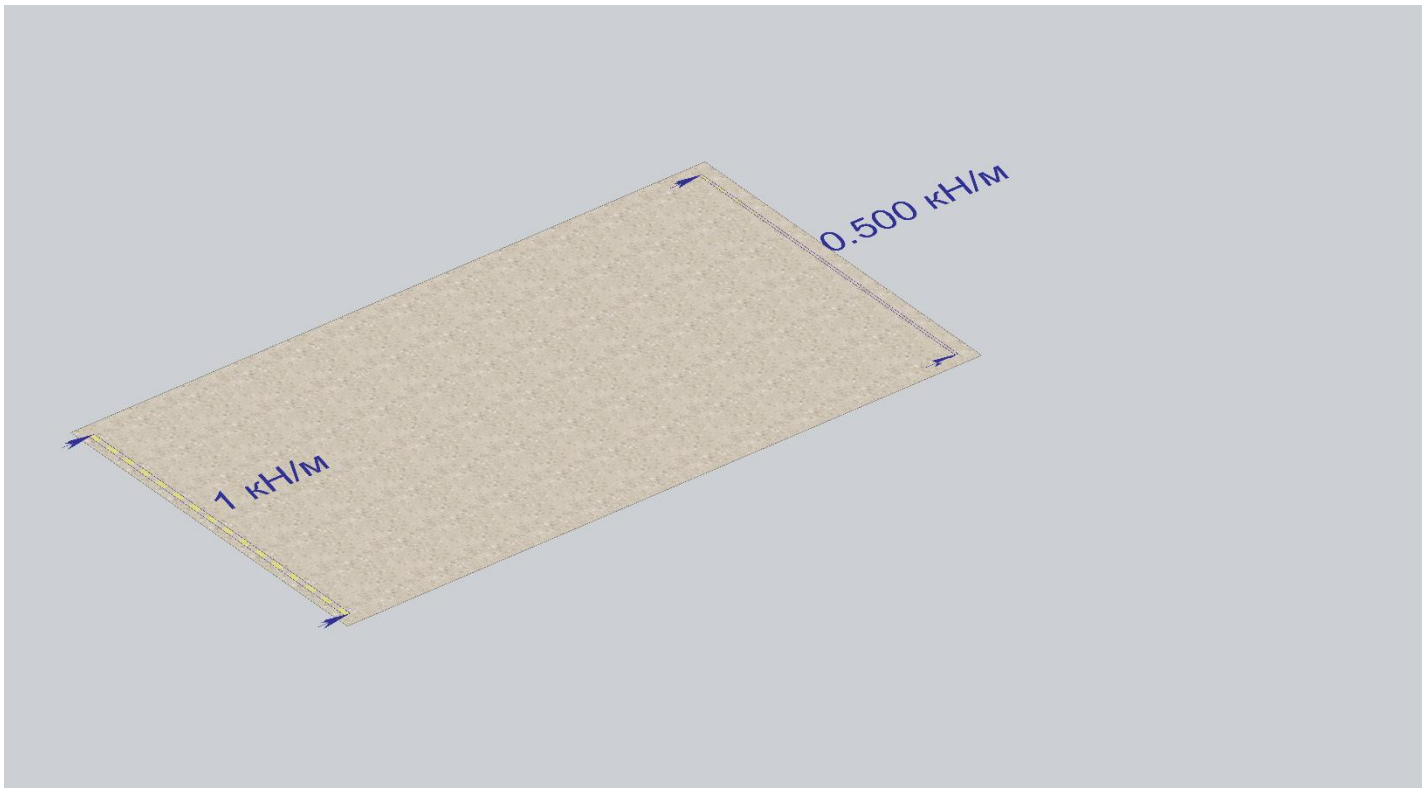

LC-7

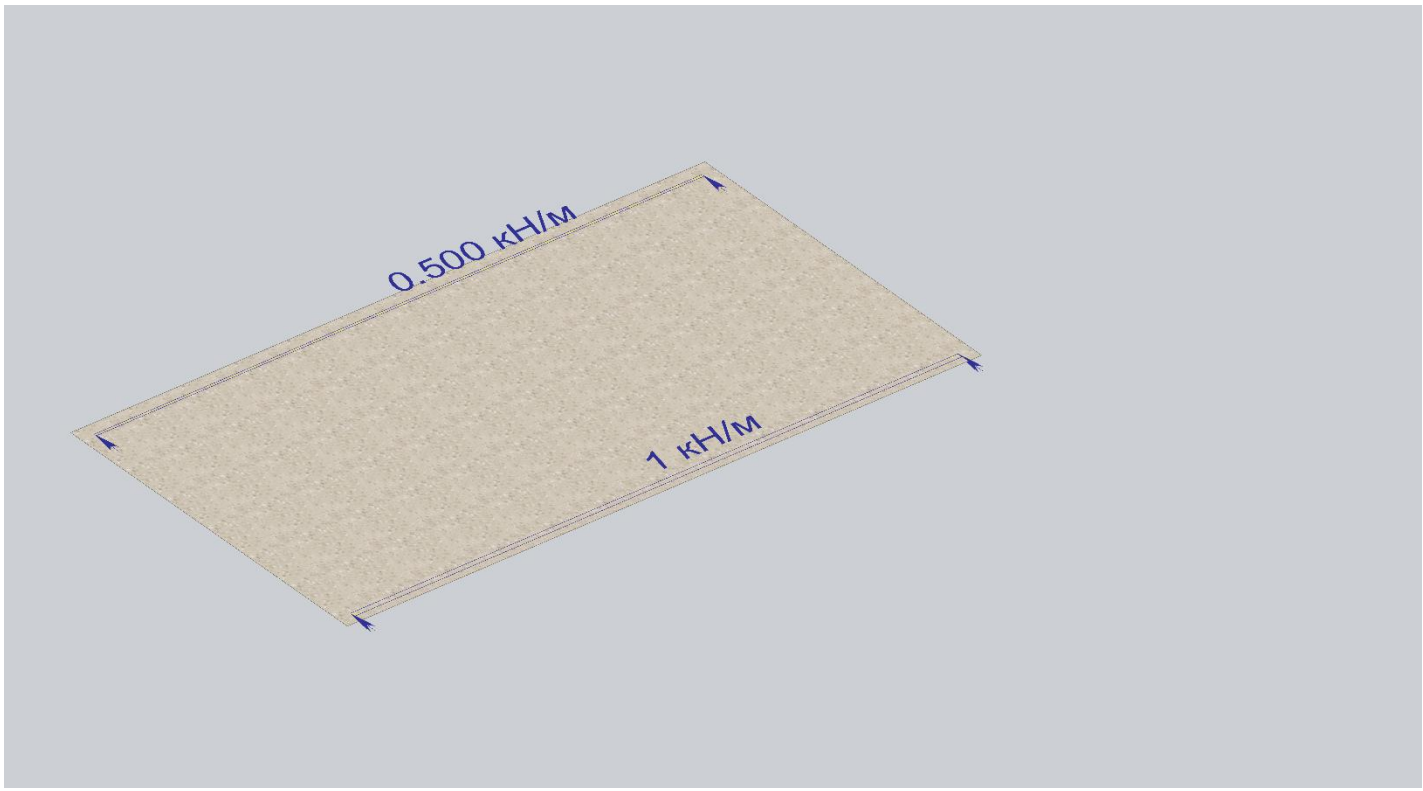

LC-8

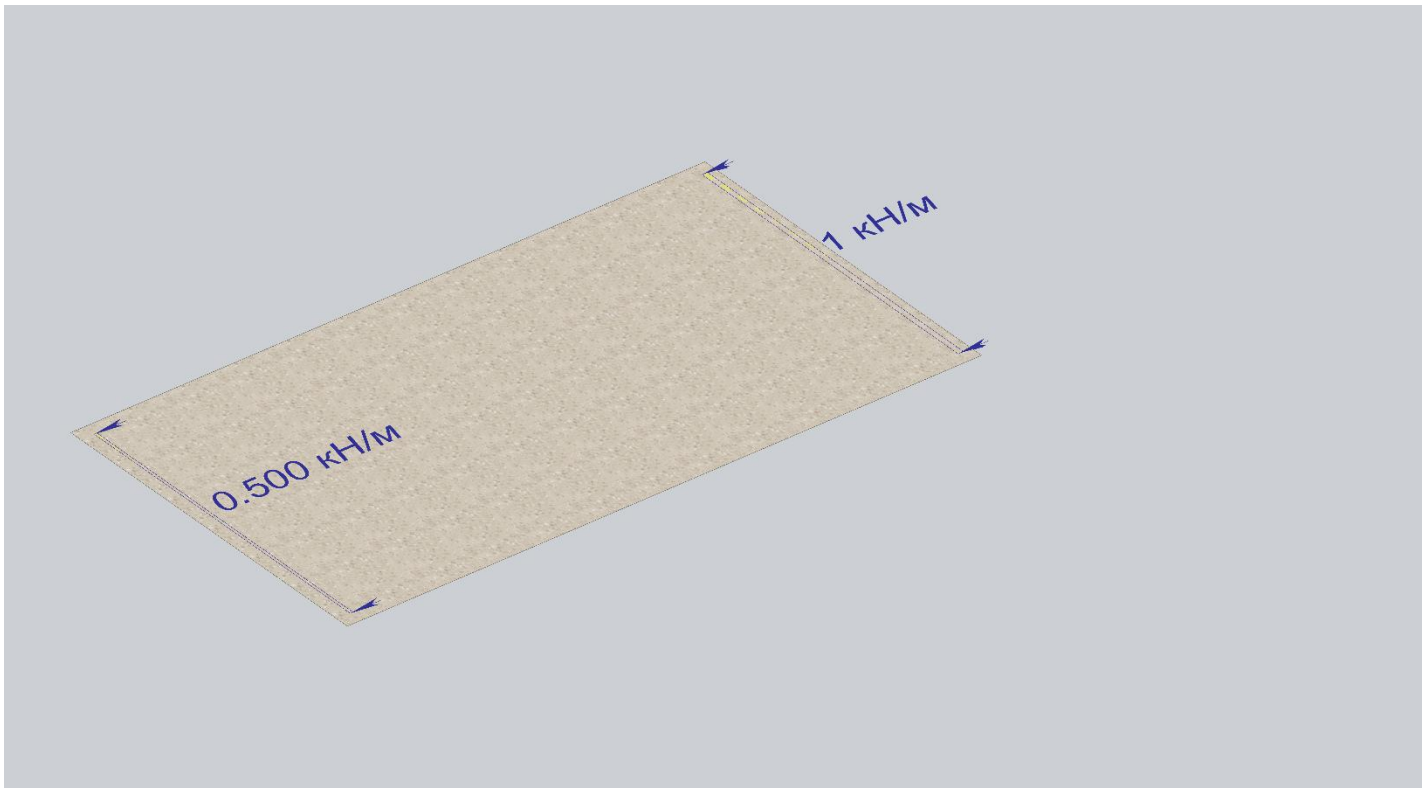

LC-9

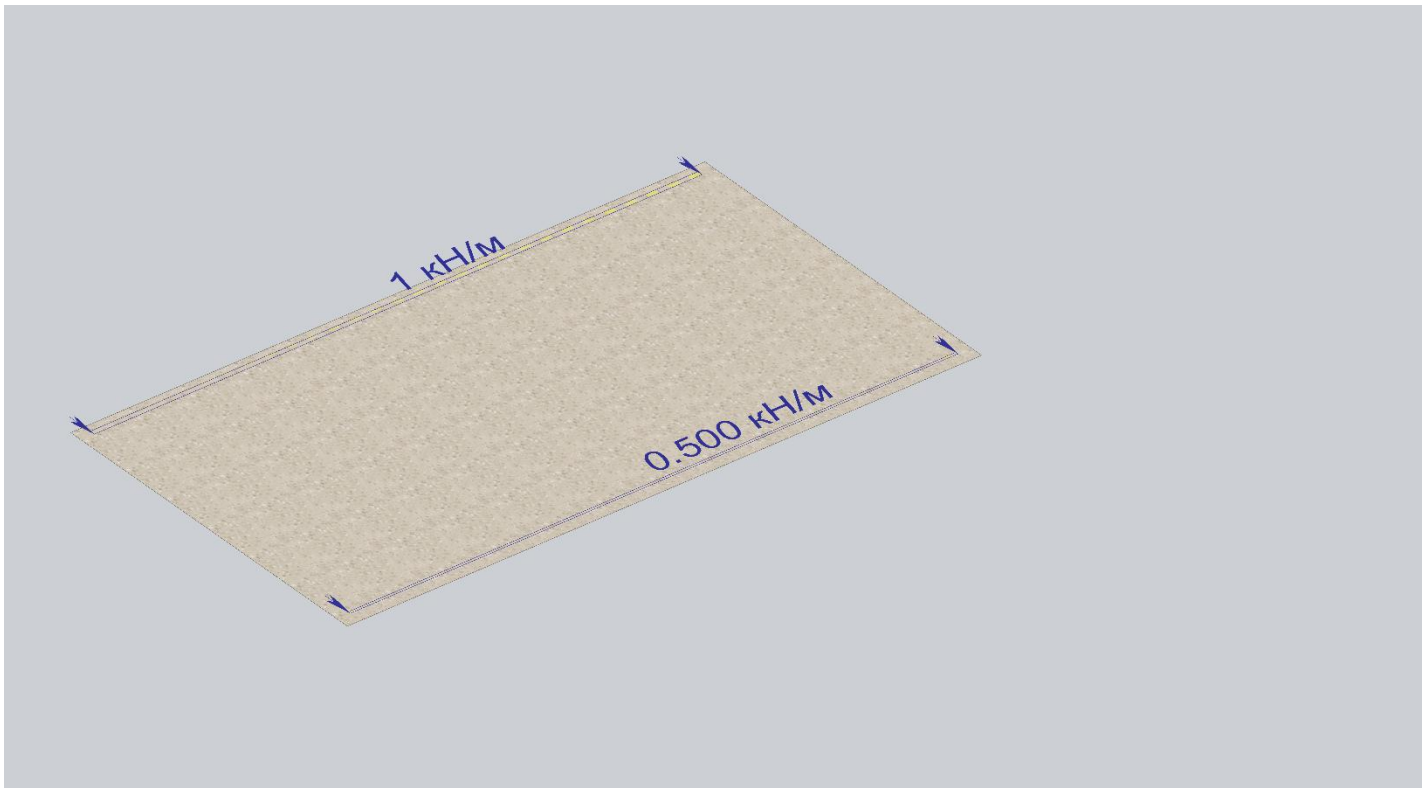

Combination No	Combination	Combination type	Components of combination (formula)
1	DCL1_I_6.10_sup	I - ULS	1.35(Gsup)1 + 1.35(Gsup)2 + 0.91(QiA)3 + 1.3(Qs)4 + 0.78(Qw)5
2	DCL2_I_6.10_sup	I - ULS	1.35(Gsup)1 + 1.35(Gsup)2 + 0.91(QiA)3 + 1.3(Qs)4 + 0.78(Qw)6
3	DCL3_I_6.10_sup	I - ULS	1.35(Gsup)1 + 1.35(Gsup)2 + 0.91(QiA)3 + 1.3(Qs)4 + 0.78(Qw)7
4	DCL4_I_6.10_sup	I - ULS	1.35(Gsup)1 + 1.35(Gsup)2 + 0.91(QiA)3 + 1.3(Qs)4 + 0.78(Qw)8
5	DCL5_I_6.10_sup	I - ULS	1.35(Gsup)1 + 1.35(Gsup)2 + 0.91(QiA)3 + 0.65(Qs)4 + 1.3(Qw)5
6	DCL6_I_6.10_sup	I - ULS	1.35(Gsup)1 + 1.35(Gsup)2 + 0.91(QiA)3 + 0.65(Qs)4 + 0.78(Qw)6
7	DCL7_I_6.10_sup	I - ULS	1.35(Gsup)1 + 1.35(Gsup)2 + 0.91(QiA)3 + 0.65(Qs)4 + 0.78(Qw)7
8	DCL8_I_6.10_sup	I - ULS	1.35(Gsup)1 + 1.35(Gsup)2 + 0.91(QiA)3 + 0.65(Qs)4 + 0.78(Qw)8
9	DCL9_I_6.10_sup	I - ULS	1.35(Gsup)1 + 1.35(Gsup)2 + 0.91(QiA)3 + 0.65(Qs)4 + 0.78(Qw)5
10	DCL10_I_6.10_sup	I - ULS	1.35(Gsup)1 + 1.35(Gsup)2 + 0.91(QiA)3 + 0.65(Qs)4 + 1.3(Qw)6
11	DCL15_I_6.10_sup	I - ULS	1.35(Gsup)1 + 1.35(Gsup)2 + 0.91(QiA)3 + 0.65(Qs)4 + 1.3(Qw)7
12	DCL20_I_6.10_sup	I - ULS	1.35(Gsup)1 + 1.35(Gsup)2 + 0.91(QiA)3 + 0.65(Qs)4 + 1.3(Qw)8
13	DCL21_IV_6.14b_sup	IV - SLS CHR	1(Gsup)1 + 1(Gsup)2 + 0.7(QiA)3 + 1(Qs)4 + 0.6(Qw)5
14	DCL22_IV_6.14b_sup	IV - SLS CHR	1(Gsup)1 + 1(Gsup)2 + 0.7(QiA)3 + 1(Qs)4 + 0.6(Qw)6
15	DCL23_IV_6.14b_sup	IV - SLS CHR	1(Gsup)1 + 1(Gsup)2 + 0.7(QiA)3 + 1(Qs)4 + 0.6(Qw)7
16	DCL24_IV_6.14b_sup	IV - SLS CHR	1(Gsup)1 + 1(Gsup)2 + 0.7(QiA)3 + 1(Qs)4 + 0.6(Qw)8
17	DCL25_IV_6.14b_sup	IV - SLS CHR	1(Gsup)1 + 1(Gsup)2 + 0.7(QiA)3 + 0.5(Qs)4 + 1(Qw)5
18	DCL26_IV_6.14b_sup	IV - SLS CHR	1(Gsup)1 + 1(Gsup)2 + 0.7(QiA)3 + 0.5(Qs)4 + 0.6(Qw)6
19	DCL27_IV_6.14b_sup	IV - SLS CHR	1(Gsup)1 + 1(Gsup)2 + 0.7(QiA)3 + 0.5(Qs)4 + 0.6(Qw)7
20	DCL28_IV_6.14b_sup	IV - SLS CHR	1(Gsup)1 + 1(Gsup)2 + 0.7(QiA)3 + 0.5(Qs)4 + 0.6(Qw)8
21	DCL29_IV_6.14b_sup	IV - SLS CHR	1(Gsup)1 + 1(Gsup)2 + 0.7(QiA)3 + 0.5(Qs)4 + 0.6(Qw)5
22	DCL30_IV_6.14b_sup	IV - SLS CHR	1(Gsup)1 + 1(Gsup)2 + 0.7(QiA)3 + 0.5(Qs)4 + 1(Qw)6
23	DCL35_IV_6.14b_sup	IV - SLS CHR	1(Gsup)1 + 1(Gsup)2 + 0.7(QiA)3 + 0.5(Qs)4 + 1(Qw)7
24	DCL40_IV_6.14b_sup	IV - SLS CHR	1(Gsup)1 + 1(Gsup)2 + 0.7(QiA)3 + 0.5(Qs)4 + 1(Qw)8
25	DCL33_VI_6.16b_sup	VI - SLS QPR	1(Gsup)1 + 1(Gsup)2 + 0.3(QiA)3

Material data

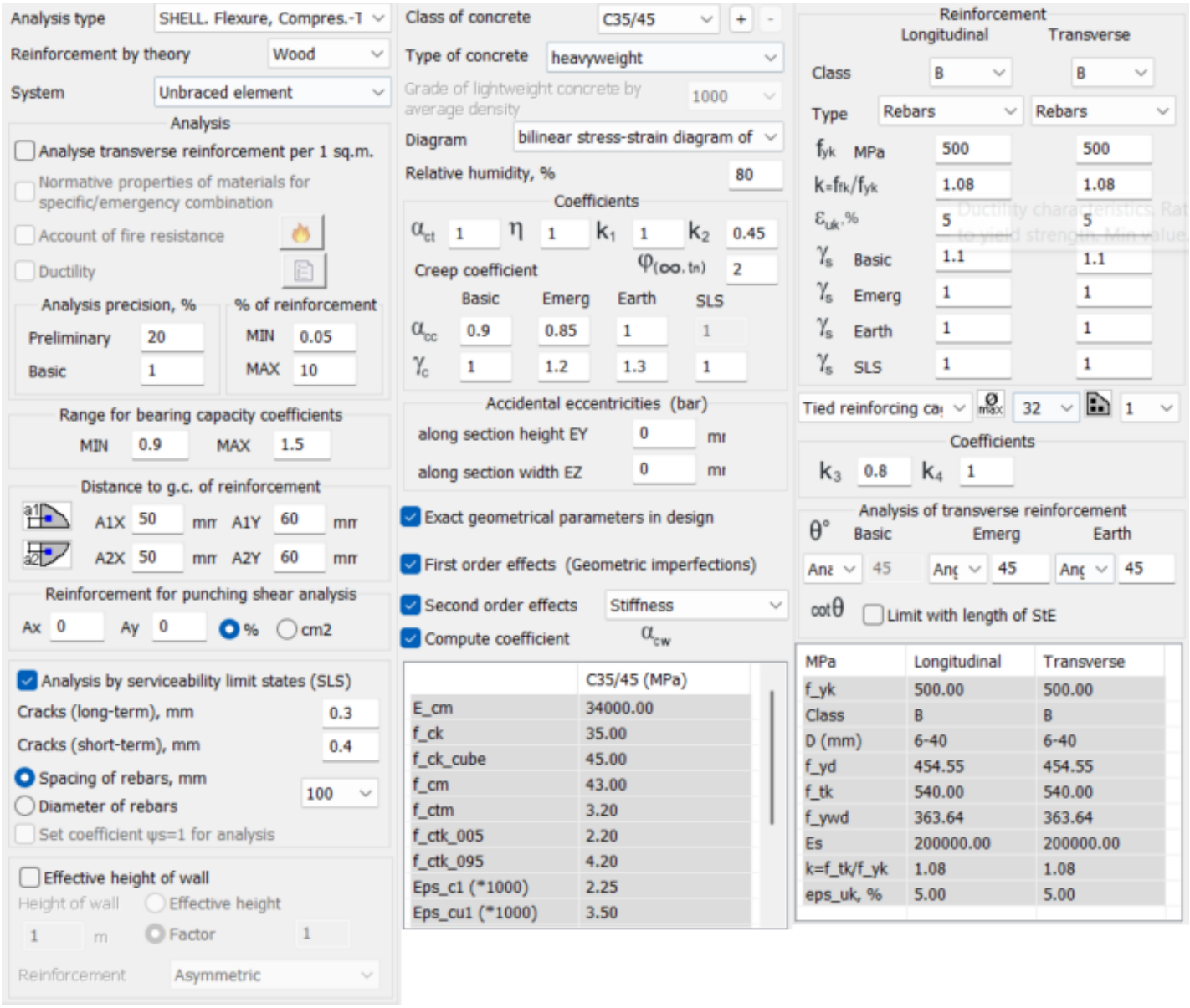

	C35/45 (MPa)
E_cm	34000.00
f_ck	35.00
f_ck_cube	45.00
f_cm	43.00
f_ctm	3.20
f_ctk_005	2.20
f_ctk_095	4.20
Eps_c1 (*1000)	2.25
Eps_cu1 (*1000)	3.50

MPa	Longitudinal	Transverse
f_yk	500.00	500.00
Class	B	B
D (mm)	6-40	6-40
f_yd	454.55	454.55
f_tk	540.00	540.00
f_ywd	363.64	363.64
Es	200000.00	200000.00
k=f_tk/f_yk	1.08	1.08
eps_uk, %	5.00	5.00

Mx (kNm/m)



Envelope line of min values (Import from LIRA-CAD:EN 1990:2002 (RC) (group B (STR/GEO)))
Stress Mx
Units of measurement - (kN*m)/m

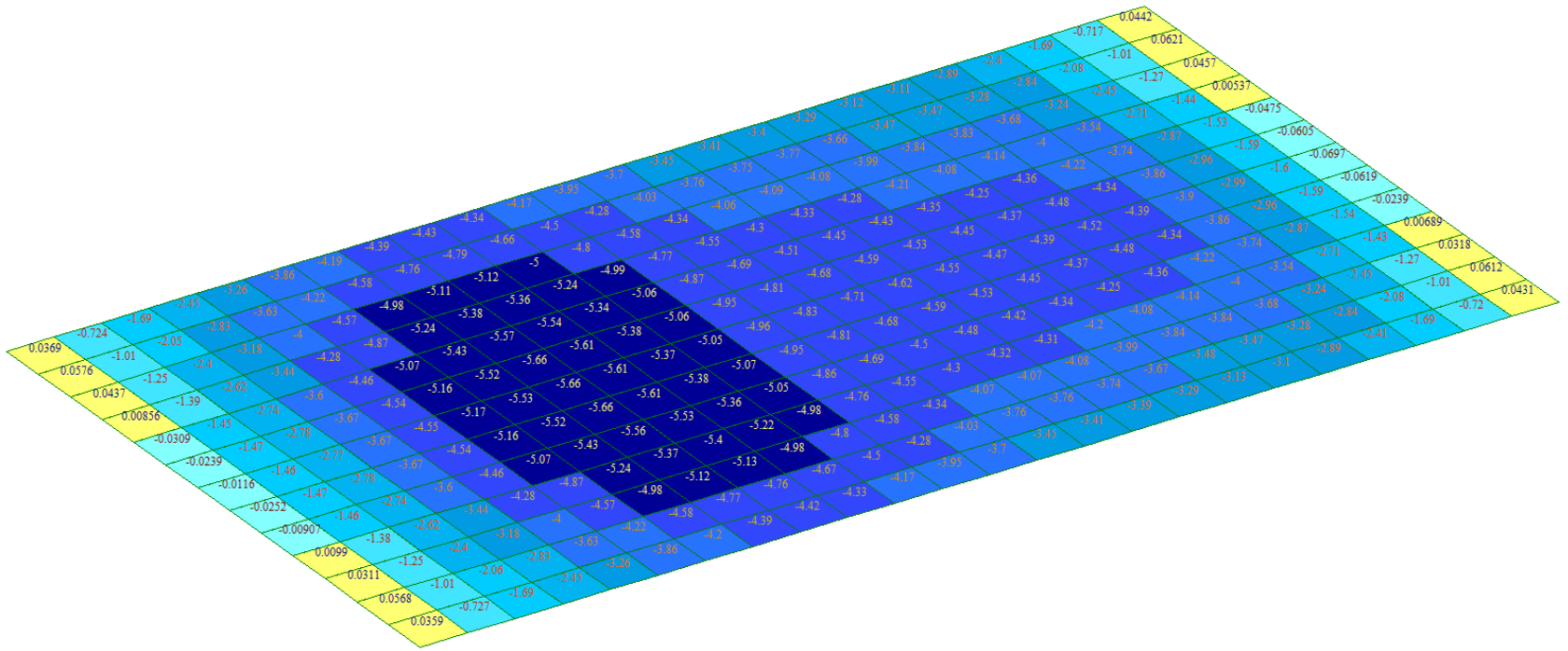



Level+ 3.000

My (kNm/m)



Envelope line of min values (Import from LIRA-CAD:EN 1990:2002 (RC) (group B (STR/GEO)))
Stress My
Units of measurement - (kN*m)/m

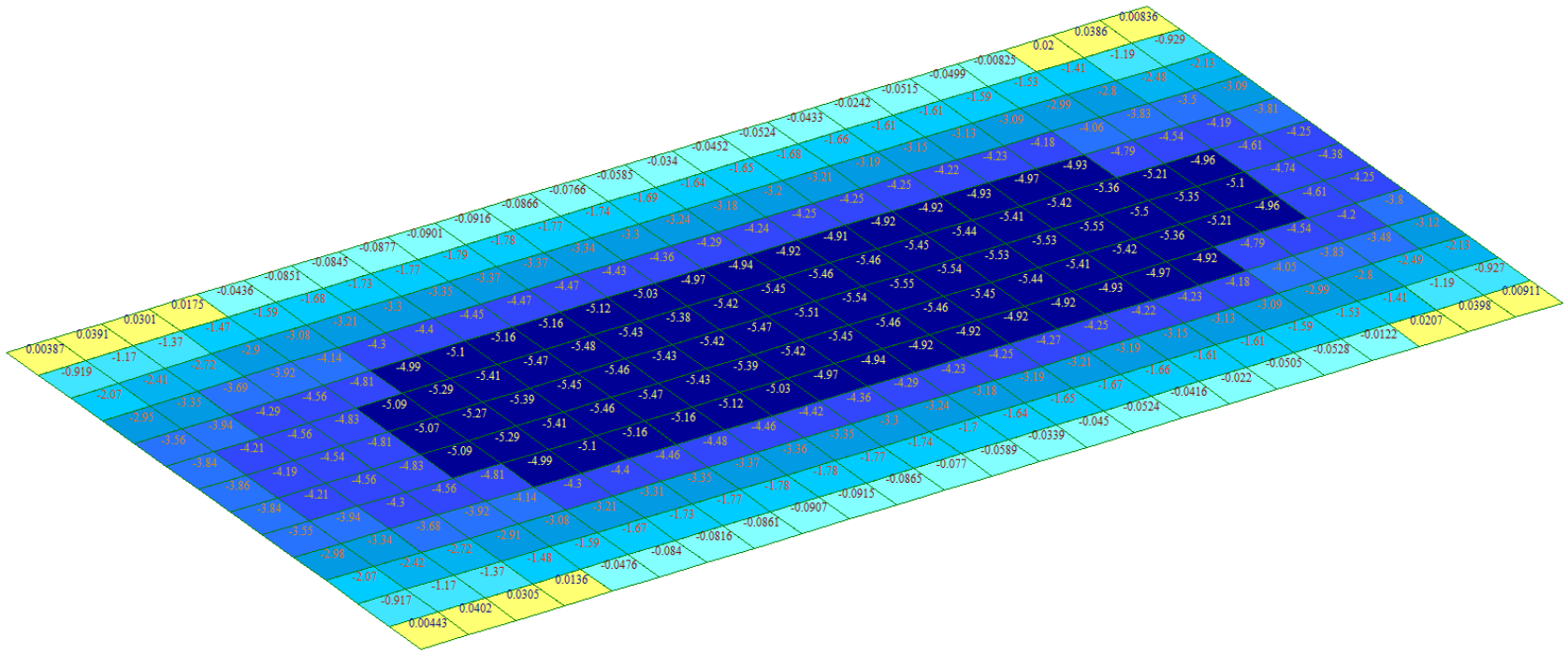



Level+ 3.000

Vx (kN/m)



Envelope line of min values (Import from LIRA-CAD:EN 1990:2002 (RC) (group B (STR/GEO)))
Stress Qx
Units of measurement - kN/m

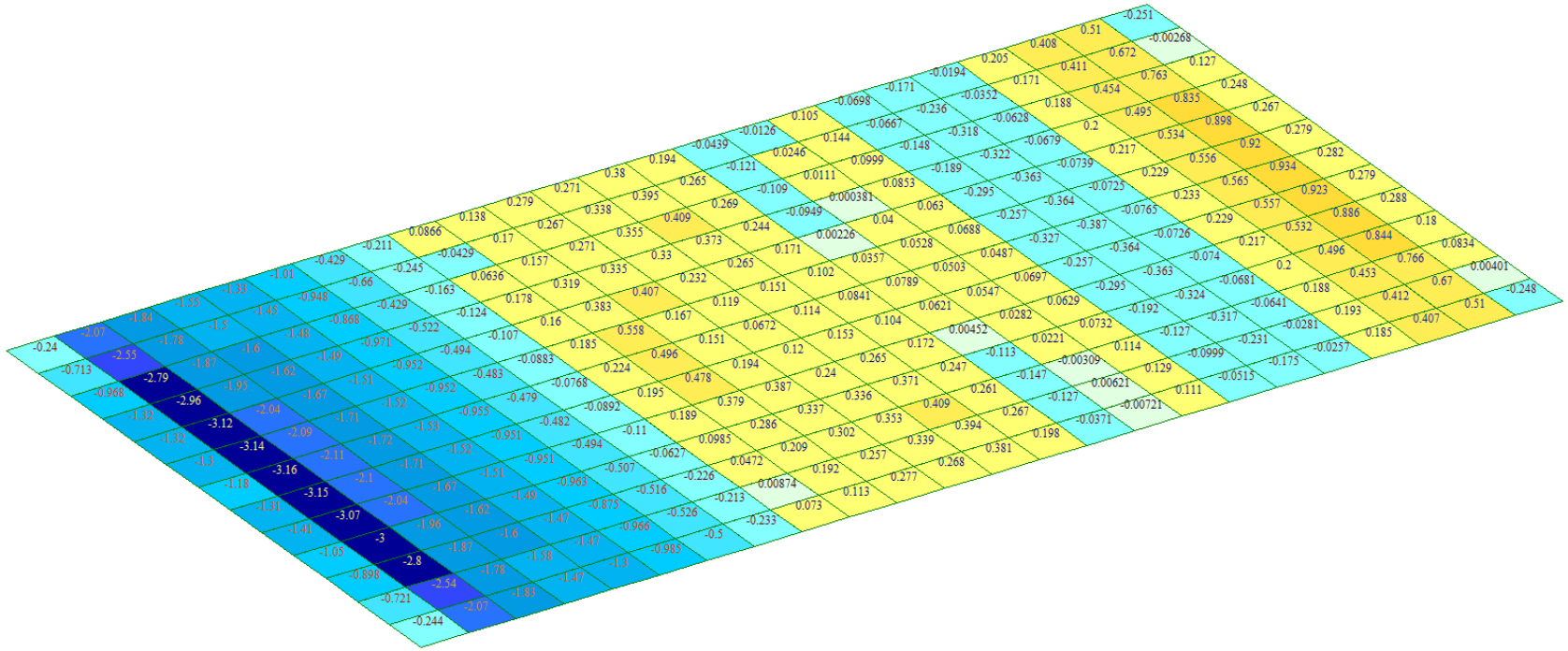



Level+ 3.000

Vy (kN/m)

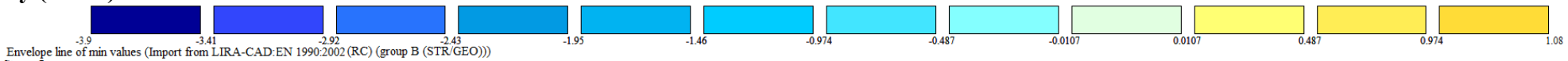

Envelope line of min values (Import from LIRA-CAD:EN 1990:2002 (RC) (group B (STR/GEO)))
Stress Qy
Units of measurement - kN/m

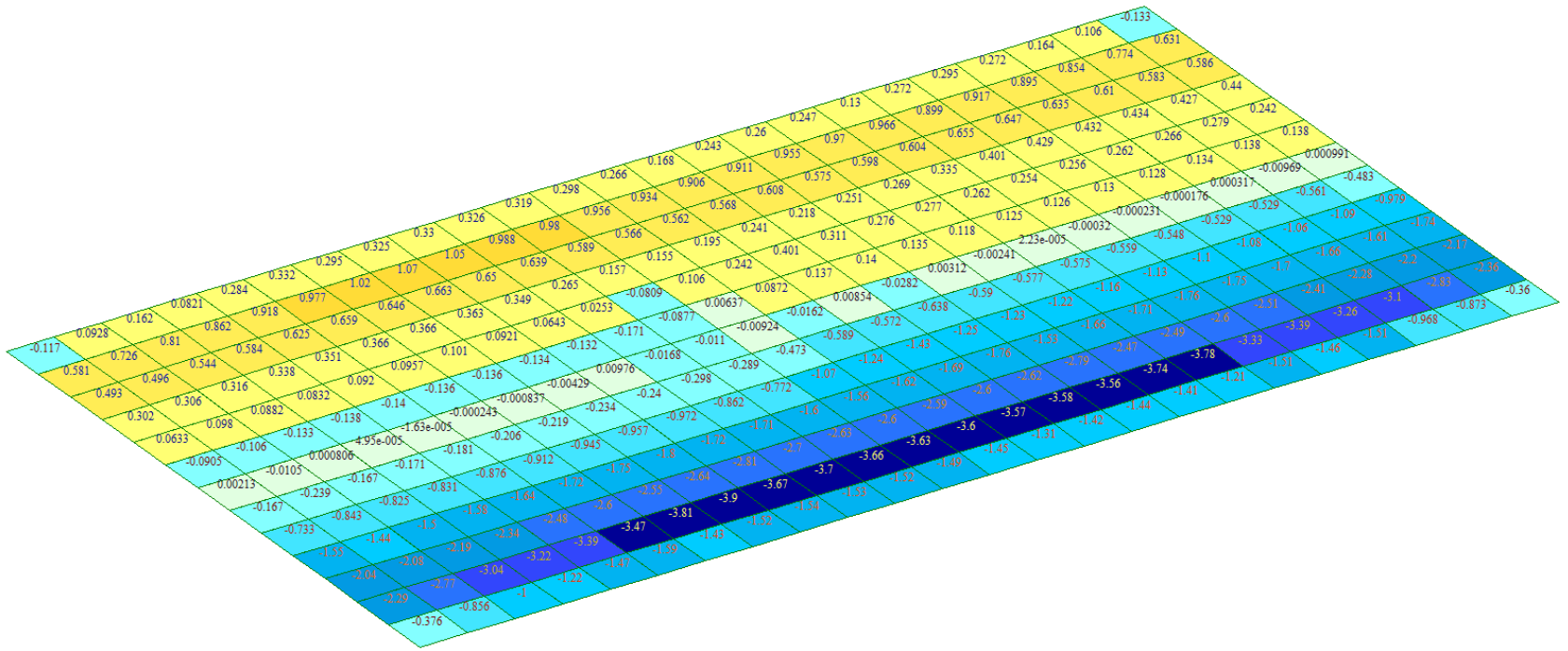



Level+ 3.000

Poslinkiai ir deformacijos (z), mm

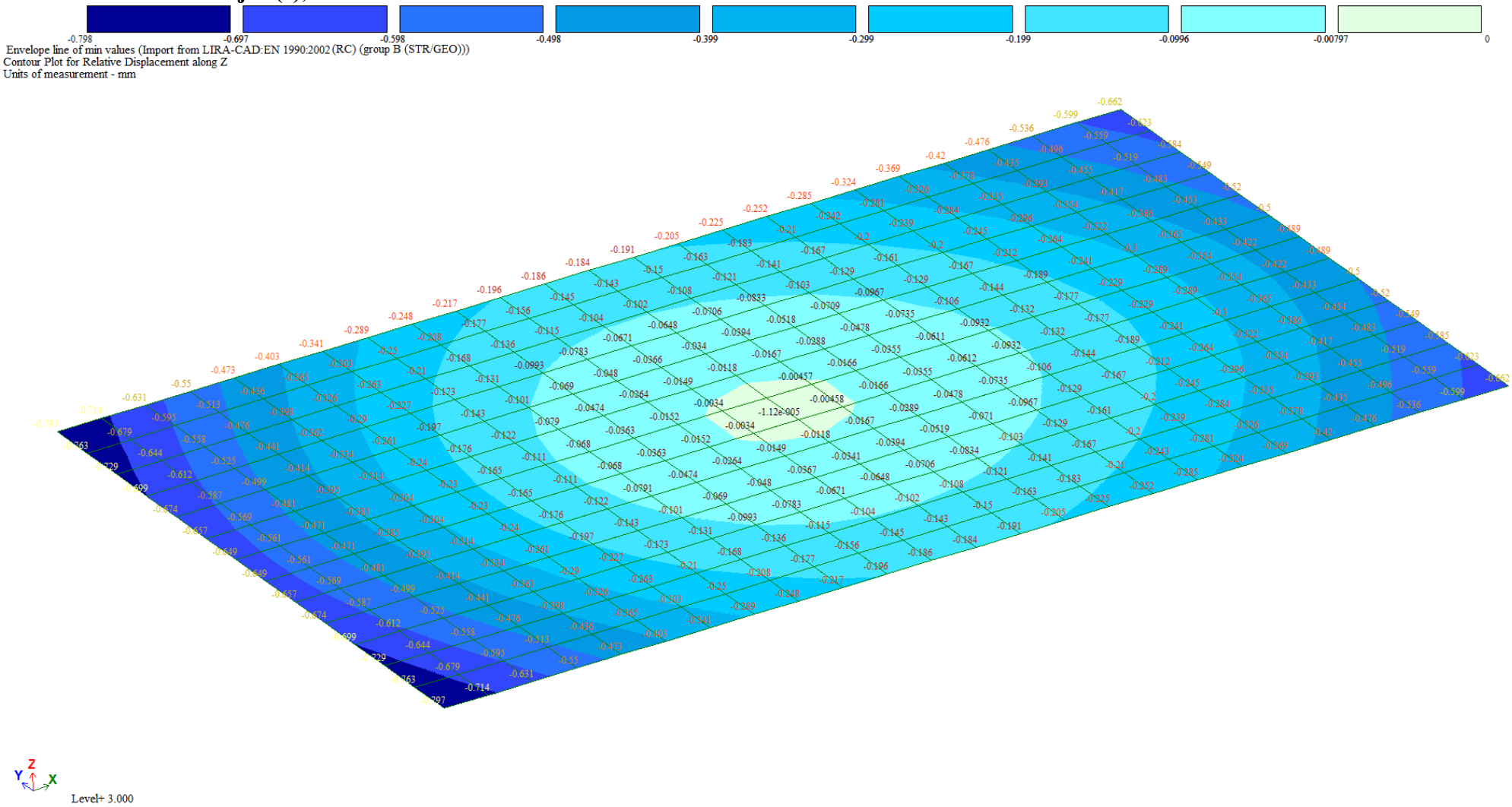

Reinforcement requirement in the x-direction of the top layer of the foundation plate

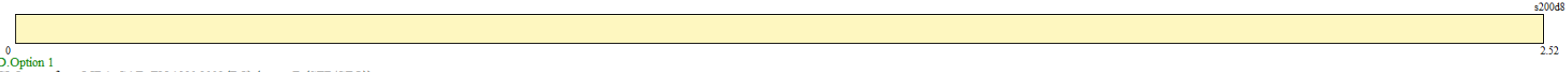

Design option:D Option 1
Analysis by DCL:Import from LIRA-CAD: EN 1990:2002 (RC) (group B (STR/GEO))
Main mode
Units of measurement - cm2/1m
Spacing, Diameter - mm

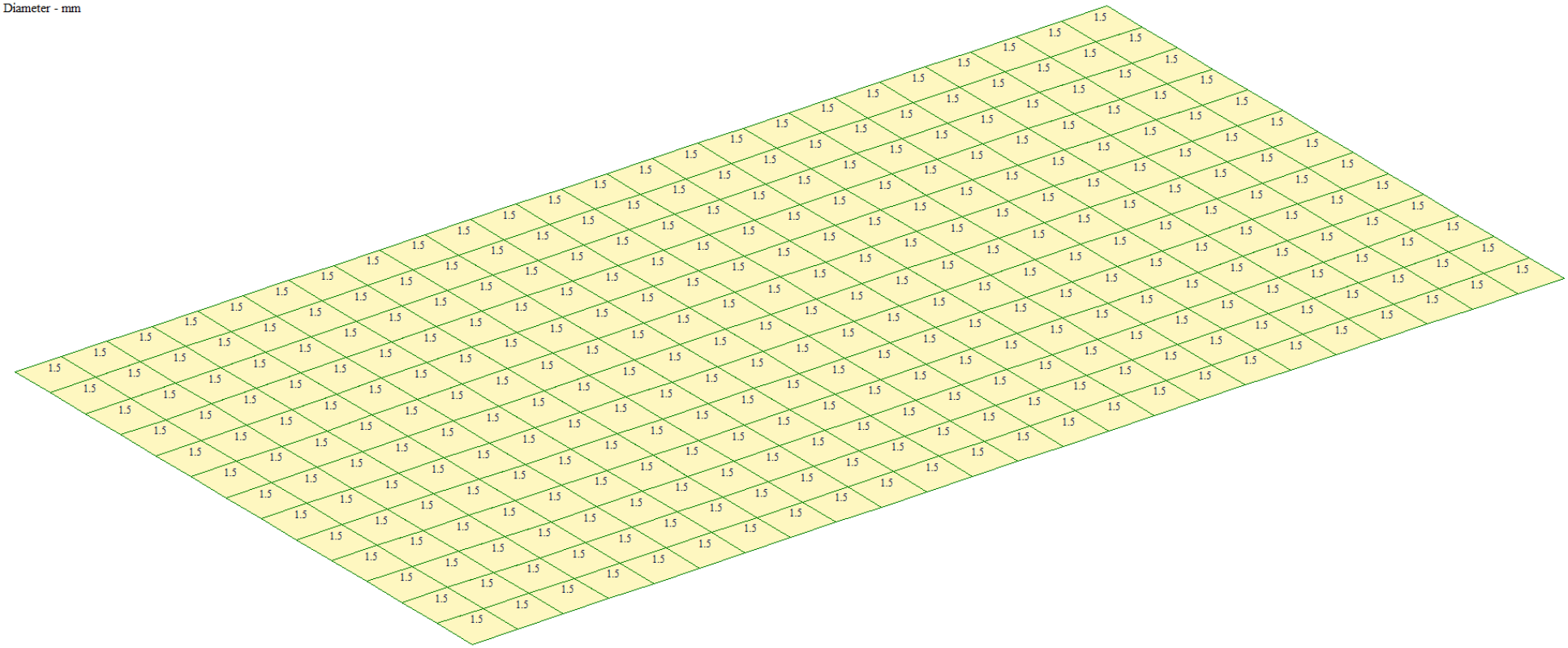



Level+ 3.000
Main mode Overall area of upper reinforcement per 1 r.m. along the X-axis; max in element 1

Reinforcement requirement in the y-direction of the top layer of the foundation plate

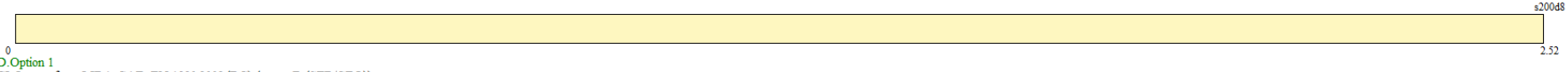

Design option:D Option 1
Analysis by DCL:Import from LIRA-CAD: EN 1990:2002 (RC) (group B (STR/GEO))
Main mode
Units of measurement - cm2/1m
Spacing, Diameter - mm

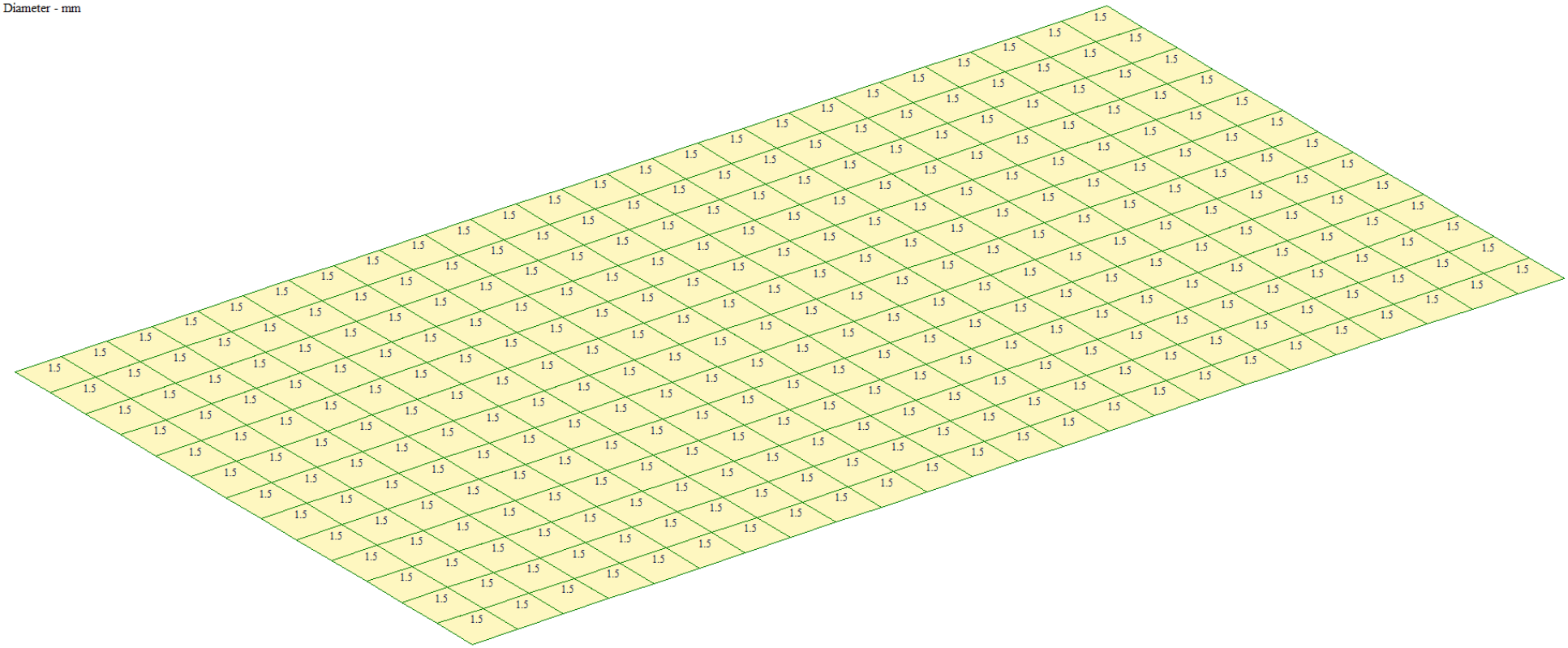



Level+ 3.000
Main mode Overall area of upper reinforcement per 1 r.m. along the Y-axis; max in element 1

Reinforcement requirement in the x-direction of the bottom layer of the foundation plate

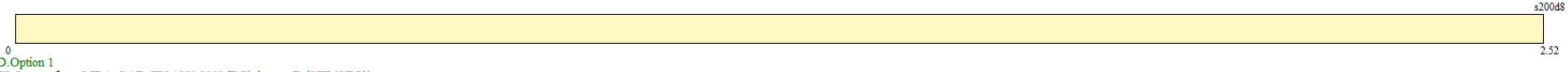

Design option:D Option 1
Analysis by DCL:Import from LIRA-CAD: EN 1990:2002 (RC) (group B (STR/GEO))
Main mode
Units of measurement - cm2/1m
Spacing, Diameter - mm

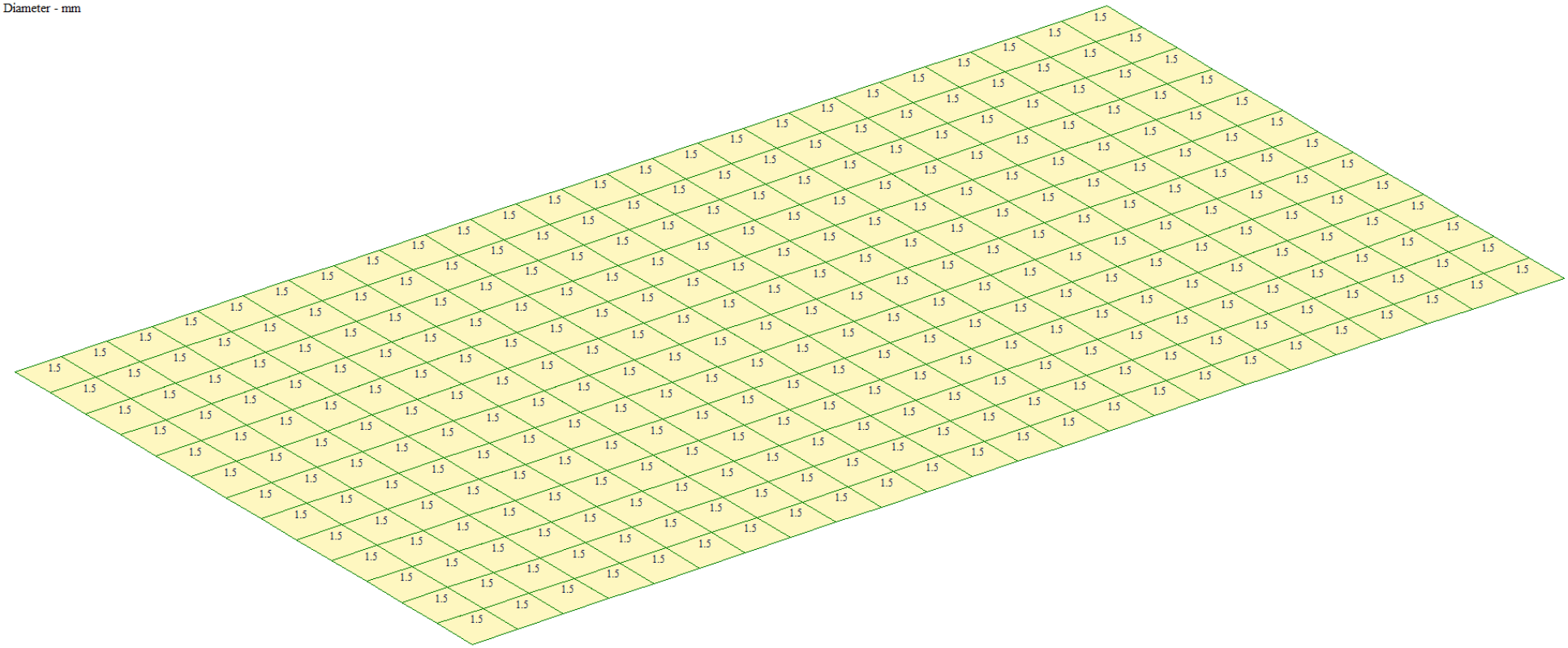



Level+ 3.000
Main mode Overall area of lower (for wall-beam - middle) reinforcement per 1 r.m. along the X-axis; max in element 1

Reinforcement requirement in the y-direction of the bottom layer of the foundation plate

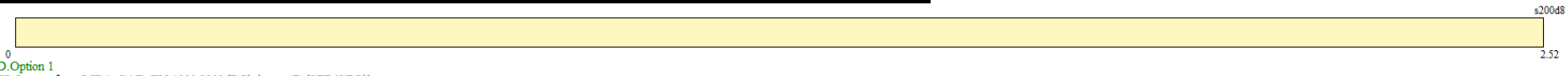

Design option:D Option 1
Analysis by DCL:Import from LIRA-CAD: EN 1990:2002 (RC) (group B (STR/GEO))
Main mode
Units of measurement - cm2/1m
Spacing, Diameter - mm

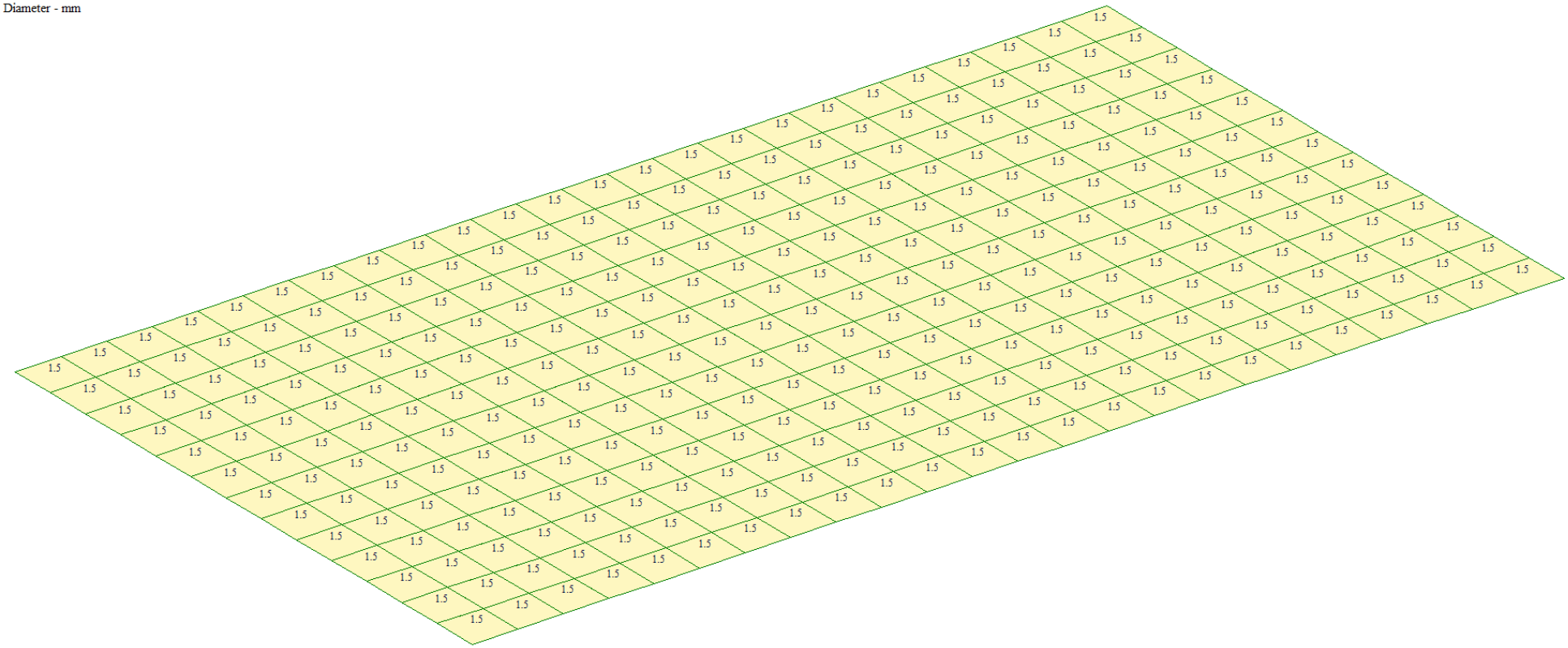



Level+ 3.000
Main mode Overall area of lower (for wall-beam - middle) reinforcement per 1 r.m. along the Y-axis; max in element 1

DIMENSIONS, TYPE	CONCRETE	REINFORCEMENT	
		Longitudinal	Transverse
Thickness: H = 300.00 mm	C35	500	500
Distance to g.c. of reinforcem.:	fck=35.0	fyk = 500.0	500.0
bottom: 50; top: 50 mm	fcm=43.0	fyd = 454.5	454.5
bottom: 60; top: 60 mm (Y)	fctk005=2.2	ftk = 540.0	540.0
Step of rebars 200 mm	fctk095=4.2	fywd = 363.6	363.6
Analysis by Wood method	Ec=34000.0	Es = 2e+005	2e+005
		Maximum diameter 32.00 mm	
		[Units of measurement = MPa]	

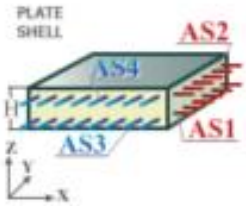

Partial safety factors for concrete

Coefficient takes into account the influence of long-term processes on the tensile strength and the adverse effects resulting from the method of load application, Act	1.00
Correction factor to reduce concrete strength values based on tests of final structure or element	1.00
Coefficient k1 (sect.7.2(2)) takes into account the limitation of compressive stress in concrete	1.00
Coefficient k2 (sect.7.2(3)) takes into account the creep in concrete	0.45
Coefficient takes into account the influence of long-term processes on the compressive strength and the adverse effects resulting from the method of load application, Acc	
Acc, Combinations: Main = 0.90; Emergency = 0.85; Earthquake = 1.00; For SLS = 1.00	
Partial safety factor for concrete, Yc	
Yc, Combinations: Main = 1.00; Emergency = 1.20; Earthquake = 1.30; For SLS = 1.00	

Partial safety factors for reinforcement

Partial safety factor for reinforcement. Longitudinal reinforcement, Ys	
Ys X, Combinations: Main = 1.10; Emergency = 1.00; Earthquake = 1.00; For SLS = 1.00	
Partial safety factor for reinforcement. Transverse reinforcement, Ys	
Ys P, Combinations: Main = 1.10; Emergency = 1.00; Earthquake = 1.00; For SLS = 1.00	
Coefficient k3 (sect.7.2(5)) takes into account the limitation of tensile stress in reinforcement	0.80
Coefficient k4 (sect.7.2(5)) takes into account the limitation of tensile stress in reinforcement in case of forced strain.	1.00

REINFORCEMENT (Analysis of reinforcement)

AS1	AS2	AS3	AS4	% X	% Y	% X+Y	ASW1	ASW2	Cr.st.	Cr.lt.
1.50	1.50	1.50	1.50	0.10	0.10	0.20		-	0.38	
1.50	1.50	1.50	1.50							

Notation in the reinforcement table:
AS1 - area of lower reinforcement along the X-axis [cm2/m];
AS2 - area of upper reinforcement along the X-axis [cm2/m];
AS3 - area of lower reinforcement along the Y-axis [cm2/m];
AS4 - area of upper reinforcement along the Y-axis [cm2/m];
% X - percentage of longitudinal reinforcement (AS1, AS2) along X;
% Y - percentage of longitudinal reinforcement (AS3, AS4) along Y;
% X+Y - total percentage of longitudinal reinforcement along X and Y;
ASW1 - transverse reinforcement along the X-axis [cm2/m];
ASW2 - transverse reinforcement along the Y-axis [cm2/m];
Cr.st - width of short-term crack propagarion [mm];
Cr.lt - width of long-term crack propagarion [mm];
+ - reinforcement selected with account of fire resistance
+ - reinforcement selected with account of fire resistance
Line 1 - whole reinforcement, determined according to serviceability limit state
Line 2 - reinforcement, determined according to ultimate limit states
Line + - reinforcement selected with account of fire resistance
Line + - reinforcement selected with account of fire resistance
Notation in the table of combinations:
DC - design combinations
B - combinations that take account of all loadings
A - combinations that take account of loadings with duration
Earthquake - S - combination that contains earthquake load

Nulenkiamos atramos Nr. 1-6 pamatas

Spread footing verification

Input data

Project

Date :

Settings

Standard - safety factors

Materials and standards

Concrete structures : EN 1992-1-1 (EC2)
Coefficients EN 1992-1-1 : standard

Settlement

Analysis method : Analysis using oedometric modulus
Restriction of influence zone : by percentage of Sigma,Or
Coeff. of restriction of influence zone : 10,0 [%]

Spread Footing

Analysis for drained conditions : Standard approach
Analysis of uplift : Standard
Allowable eccentricity : 0,333
Verification methodology : Safety factors (ASD)

Safety factors			
Permanent design situation			
Safety factor for vertical bearing capacity :	SF_v =	1,50	[–]
Safety factor for sliding resistance :	SF_h =	1,50	[–]

Basic soil parameters

No.	Name	Pattern	φ_{ef} [°]	c_{ef} [kPa]	γ [kN/m3]	γ_{su} [kN/m3]	δ [°]
1	Supiltas gruntas		20,00	10,00	18,00	8,00	
2	saClL vidutinio stiprumo		25,00	12,00	20,80	10,80	
3	saClL stiprus		27,00	20,00	21,80	11,80	
4	saClL vidutinio stiprumo 2		26,00	18,00	21,80	11,80	
5	saClL stiprus 2		27,00	20,00	21,80	11,80	

All soils are considered as cohesionless for at rest pressure analysis.

Soil parameters

Supiltas gruntas

Unit weight : γ = 18,00 kN/m3
Angle of internal friction : φ_{ef} = 20,00 °
Cohesion of soil : c_{ef} = 10,00 kPa
Oedometric modulus : E_{oed} = 0,50 MPa
Saturated unit weight : γ_{sat} = 18,00 kN/m3

saClL vidutinio stiprumo

[GEO5 - Spread Footing (demoversion) | version 5.2020.42.0 | Copyright © 2020 Fine spol. s r.o. All Rights Reserved | www.finesoftware.eu]

Unit weight :	γ	=	20,80 kN/m^3
Angle of internal friction :	φ_{ef}	=	25,00 °
Cohesion of soil :	c_{ef}	=	12,00 kPa
Oedometric modulus :	E_{oed}	=	12,00 MPa
Saturated unit weight :	γ_{sat}	=	20,80 kN/m^3

saCIL stiprus

Unit weight :	γ	=	21,80 kN/m^3
Angle of internal friction :	φ_{ef}	=	27,00 °
Cohesion of soil :	c_{ef}	=	20,00 kPa
Oedometric modulus :	E_{oed}	=	28,00 MPa
Saturated unit weight :	γ_{sat}	=	21,80 kN/m^3

saCIL vidutinio stiprumo 2

Unit weight :	γ	=	21,80 kN/m^3
Angle of internal friction :	φ_{ef}	=	26,00 °
Cohesion of soil :	c_{ef}	=	18,00 kPa
Oedometric modulus :	E_{oed}	=	22,00 MPa
Saturated unit weight :	γ_{sat}	=	21,80 kN/m^3

saCIL stiprus 2

Unit weight :	γ	=	21,80 kN/m^3
Angle of internal friction :	φ_{ef}	=	27,00 °
Cohesion of soil :	c_{ef}	=	20,00 kPa
Oedometric modulus :	E_{oed}	=	28,00 MPa
Saturated unit weight :	γ_{sat}	=	21,80 kN/m^3

Foundation

Foundation type: centric spread footing

Depth from original ground surface	h_z	=	1,70 m
Depth of footing bottom	d	=	1,30 m
Foundation thickness	t	=	0,50 m
Incl. of finished grade	s_1	=	0,00 °
Incl. of footing bottom	s_2	=	0,00 °

Overburden

Type: input unit weight

Unit weight of soil above foundation = 20,00 kN/m^3

Geometry of structure

Foundation type: centric spread footing

Spread footing length	x	=	2,40 m
Spread footing width	y	=	2,40 m
Column width in the direction of x	c_x	=	0,80 m
Column width in the direction of y	c_y	=	0,80 m

Spread footing volume	=	2,88 m^3
Volume of excavation	=	7,49 m^3
Volume of fill	=	4,10 m^3

Material of structure

Unit weight γ = 23,00 kN/m^3

Analysis of concrete structures carried out according to the standard EN 1992-1-1 (EC2).

Concrete : C 35/45

Cylinder compressive strength f_{ck} = 35,00 MPa

[GEO5 - Spread Footing (demoversion) | version 5.2020.42.0 | Copyright © 2020 Fine spol. s r.o. All Rights Reserved | www.finesoftware.eu]

Tensile strength f_{ctm} = 3,20 MPa
Elasticity modulus E_{cm} = 34000,00 MPa

Longitudinal steel : B500
Yield strength f_{yk} = 500,00 MPa

Transverse steel: B500
Yield strength f_{yk} = 500,00 MPa

Geological profile and assigned soils

No.	Thickness of layer t [m]	Depth z [m]	Assigned soil	Pattern
1	0,40	0,00 .. 0,40	Supiltas gruntas	
2	1,40	0,40 .. 1,80	saClL vidutinio stiprumo	
3	4,60	1,80 .. 6,40	saClL stiprus	
4	1,80	6,40 .. 8,20	saClL vidutinio stiprumo 2	
5	3,80	8,20 .. 12,00	saClL stiprus 2	
6	-	12,00 .. ∞	saClL stiprus 2	

Load

No.	Load		Name	Type	N [kN]	M_x [kNm]	M_y [kNm]	H_x [kN]	H_y [kN]
	new	change							
1	Yes		Dead Load	Design	28,62	0,00	0,00	0,00	0,00
2	Yes		Wind	Design	0,00	0,00	0,00	13,50	0,00

Global settings

Type of analysis : analysis for drained conditions

Settings of the stage of construction

Design situation : permanent

Verification No. 1

Load case verification

Name	e_x [m]	e_y [m]	σ [kPa]	R_d [kPa]	Utilization [%]	Is satisfactory
Dead Load	0,00	0,00	30,69	1327,95	3,47	Yes
Wind	0,05	0,00	26,74	1086,51	3,69	Yes

Analysis carried out with automatic selection of the most unfavourable load cases.

Computed weight of spread footing G = 66,24 kN
Computed weight of overburden Z = 81,92 kN

Vertical bearing capacity check

Shape of contact stress : rectangle
Most unfavorable load case No. 2. (Wind)

Parameters of slip surface below foundation:
Depth of slip surface z_{sp} = 3,44 m

[GEO5 - Spread Footing (demoversion) | version 5.2020.42.0 | Copyright © 2020 Fine spol. s r.o. All Rights Reserved | www.finesoftware.eu]

Length of slip surface l_{sp} = 9,90 m

Design bearing capacity of found.soil R_d = 1086,51 kPa
Extreme contact stress σ = 26,74 kPa

Factor of safety = 40,64 > 1,50
Bearing capacity in the vertical direction is SATISFACTORY

Verification of load eccentricity

Max. eccentricity in direction of base length e_x = 0,019<0,333
Max. eccentricity in direction of base width e_y = 0,000<0,333
Max. overall eccentricity e_t = 0,019<0,333

Eccentricity of load is SATISFACTORY

Horizontal bearing capacity check

Most unfavorable load case No. 2. (Wind)
Earth resistance: at rest
Design magnitude of earth resistance S_{pd} = 15,13 kN

Horizontal bearing capacity R_{dh} = 150,72 kN
Extreme horizontal force H = 13,50 kN

Factor of safety = 11,16 > 1,50
Bearing capacity in the horizontal direction is SATISFACTORY

Bearing capacity of foundation is SATISFACTORY

Dimensioning No. 1

Analysis carried out with automatic selection of the most unfavourable load cases.

Verification of longitudinal reinforcement of foundation in the direction of x

20 prof. 20,0 mm, cover 50,0 mm
Cross-section width = 2,40 m
Cross-section depth = 0,50 m

Reinforcement ratio	ρ	=	0,59	%	>	0,17	%	= ρ_{min}
Position of neutral axis	x	=	0,06	m	<	0,27	m	= x_{max}
Ultimate moment	M_{Rd}	=	1135,37	kNm	>	14,74	kNm	= M_{Ed}

Cross-section is SATISFACTORY.

Verification of longitudinal reinforcement of foundation in the direction of y

20 prof. 20,0 mm, cover 50,0 mm
Cross-section width = 2,40 m
Cross-section depth = 0,50 m

Reinforcement ratio	ρ	=	0,59	%	>	0,17	%	= ρ_{min}
Position of neutral axis	x	=	0,06	m	<	0,27	m	= x_{max}
Ultimate moment	M_{Rd}	=	1135,37	kNm	>	14,74	kNm	= M_{Ed}

Cross-section is SATISFACTORY.

Spread footing for punching shear failure check

Column normal force = 28,62 kN

[GEO5 - Spread Footing (demoversion) | version 5.2020.42.0 | Copyright © 2020 Fine spol. s r.o. All Rights Reserved | www.finesoftware.eu]

Maximum resistance at the column perimeter

Force transferred into found. soil		=	3,18	kN
Force transferred by shear strength of foundation		=	25,44	kN
Considered column perimeter	u_0	=	3,20	m
Shear resistance at the column perimeter	$v_{Ed,max}$	=	0,02	MPa
Resistance at the column perimeter	$v_{Rd,max}$	=	4,82	MPa

Critical section without shear reinforcement

Force transferred into found. soil		=	10,13	kN
Force transferred by shear strength of foundation		=	18,49	kN
Distance of section from the column		=	0,33	m
Section perimeter	u	=	5,27	m
Shear stress at section	v_{Ed}	=	0,01	MPa
Shear resistance of section without shear reinforcement	$v_{Rd,c}$	=	1,41	MPa

$v_{Ed} < v_{Rd,c}$ => Reinforcement is not required

Spread footing for punching shear is SATISFACTORY

[GEO5 - Spread Footing (demoversion) | version 5.2020.42.0 | Copyright © 2020 Fine spol. s r.o. All Rights Reserved | www.finesoftware.eu]

Tinklo atramų ir tvorų pamatai

Pile verification

Input data

Project

Date : 12.08.2025

Settings

Standard - safety factors

Materials and standards

Concrete structures :	EN 1992-1-1 (EC2)
Coefficients EN 1992-1-1 :	standard
Steel structures :	EN 1993-1-1 (EC3)
Partial factor on bearing capacity of steel cross section :	γ_{M0} = 1,00
Timber structures :	EN 1995-1-1 (EC5)
Partial factor for timber property :	γ_M = 1,30
Modif. factor of load duration and moisture content :	k_{mod} = 0,50
Coeff. of effective width for shear stress :	k_{cr} = 0,67

Pile

Analysis for drained conditions :	NAVFAC DM 7.2
Load settlement curve :	linear (Poulos)
Horizontal bearing capacity :	Elastic subsoil (p-y method)
Verification methodology :	Safety factors (ASD)

Safety factors			
Permanent design situation			
Safety factor for compressive pile :	SF_{cp} =	2,00	[–]
Safety factor for tensile pile :	SF_{tp} =	3,00	[–]

Basic soil parameters

No.	Name	Pattern	γ [kN/m³]	ν [–]
1	Supiltas gruntas		18,00	0,35
2	saCIL vidutinio stiprumo		20,08	0,35
3	saCIL stiprus		21,80	0,35
4	saCIL vidutinio stiprumo 2		21,80	0,35

All soils are considered as cohesionless for at rest pressure analysis.

No.	Name	Pattern	E_{oed} [MPa]	E_{def} [MPa]	γ_{sat} [kN/m³]	γ_s [kN/m³]	n [–]
1	Supiltas gruntas		0,50	-	18,00	-	-
2	saCIL vidutinio stiprumo		12,00	-	20,80	-	-
3	saCIL stiprus		28,00	-	21,80	-	-

[GEO5 - Pile (demoversion) | version 5.2020.40.0 | Copyright © 2020 Fine spol. s r.o. All Rights Reserved | www.finesoftware.eu]

No.	Name	Pattern	E_{oed} [MPa]	E_{def} [MPa]	γ_{sat} [kN/m³]	γ_s [kN/m³]	n [–]
4	saCIL vidutinio stiprumo 2		22,00	-	21,80	-	-

No.	Name	Pattern	φ_{ef} [°]	δ [°]	K [–]	c_u [kPa]	α [–]
1	Supiltas gruntas		20,00	13,00	0,90	-	-
2	saCIL vidutinio stiprumo		25,00	17,00	0,95	-	-
3	saCIL stiprus		27,00	18,00	1,00	-	-
4	saCIL vidutinio stiprumo 2		26,00	18,00	1,00	-	-

Parameters of soils to compute modulus of subsoil reaction

No.	Name	Pattern	β
1	Supiltas gruntas		20,00
2	saCIL vidutinio stiprumo		25,00
3	saCIL stiprus		27,00
4	saCIL vidutinio stiprumo 2		26,00

Soil parameters

Supiltas gruntas

Unit weight :	γ	=	18,00 kN/m³
Poisson's ratio :	ν	=	0,35
Oedometric modulus :	E_{oed}	=	0,50 MPa
Saturated unit weight :	γ_{sat}	=	18,00 kN/m³
Angle of dispersion :	β	=	20,00 °
Pile skin friction :	δ	=	13,00 °
Coefficient of lateral stress :	K	=	0,90

saCIL vidutinio stiprumo

Unit weight :	γ	=	20,08 kN/m³
Poisson's ratio :	ν	=	0,35
Oedometric modulus :	E_{oed}	=	12,00 MPa
Saturated unit weight :	γ_{sat}	=	20,80 kN/m³
Angle of dispersion :	β	=	25,00 °
Pile skin friction :	δ	=	17,00 °
Coefficient of lateral stress :	K	=	0,95

saCIL stiprus

Unit weight :	γ	=	21,80 kN/m³
Poisson's ratio :	ν	=	0,35
Oedometric modulus :	E_{oed}	=	28,00 MPa
Saturated unit weight :	γ_{sat}	=	21,80 kN/m³
Angle of dispersion :	β	=	27,00 °

[GEO5 - Pile (demoversion) | version 5.2020.40.0 | Copyright © 2020 Fine spol. s r.o. All Rights Reserved | www.finesoftware.eu]

Pile skin friction : δ = 18,00 °
Coefficient of lateral stress : K = 1,00

saCIL vidutinio stiprumo 2
Unit weight : γ = 21,80 kN/m^3
Poisson's ratio : ν = 0,35
Oedometric modulus : E_{oed} = 22,00 MPa
Saturated unit weight : γ_{sat} = 21,80 kN/m^3
Angle of dispersion : β = 26,00 °
Pile skin friction : δ = 18,00 °
Coefficient of lateral stress : K = 1,00

Geometry

Pile profile: circular
Dimensions
Diameter d = 0,60 m
Length l = 1,50 m

Calculated cross-sectional characteristics
Area A = 2,83E-01 m^2
Moment of inertia I = 6,36E-03 m^4

Location
Off ground height h = 0,40 m
Depth of finished grade h_z = 0,40 m

Technology: Bored piles
Modulus of subsoil reaction assumed constant.

Material of structure

Unit weight γ = 23,00 kN/m^3
Analysis of concrete structures carried out according to the standard EN 1992-1-1 (EC2).

Concrete : C 35/45
Cylinder compressive strength f_{ck} = 35,00 MPa
Tensile strength f_{ctm} = 3,20 MPa
Elasticity modulus E_{cm} = 34000,00 MPa
Shear modulus G = 14167,00 MPa

Longitudinal steel : B500
Yield strength f_{yk} = 500,00 MPa

Transverse steel: B500
Yield strength f_{yk} = 500,00 MPa

Geological profile and assigned soils

No.	Thickness of layer t [m]	Depth z [m]	Assigned soil	Pattern
1	0,40	0,00 .. 0,40	Supiltas gruntas	
2	1,40	0,40 .. 1,80	saCIL vidutinio stiprumo	
3	4,60	1,80 .. 6,40	saCIL stiprus	
4	1,80	6,40 .. 8,20	saCIL vidutinio stiprumo 2	
5	3,80	8,20 .. 12,00	saCIL stiprus	

[GEO5 - Pile (demoversion) | version 5.2020.40.0 | Copyright © 2020 Fine spol. s r.o. All Rights Reserved | www.finesoftware.eu]

No.	Thickness of layer t [m]	Depth z [m]	Assigned soil	Pattern
6	-	12,00 .. ∞	saClL stiprus	

Load

No.	Load new	Load change	Name	Type	N [kN]	M_x [kNm]	M_y [kNm]	H_x [kN]	H_y [kN]
1	Yes		Wind load	Design	0,00	8,00	0,00	2,50	0,00
2	Yes		Dead load	Design	2,00	0,00	0,00	0,00	0,00

Global settings

Analysis of vertical bearing capacity : analytical solution
Analysis type : analysis for drained conditions

Settings of the stage of construction

Design situation : permanent
Verification methodology : without reduction of soil parameters

Verification No. 1

Verification of pile bearing capacity according to NAVFAC DM 7.2 - partial results

Pile base bearing capacity:
The soil under the base is cohesionless
Coefficient of bearing capacity N_q = 4,81
Area of pile transverse cross-section A_p = 2,83E-01 m^2

Plie shaft resistance:

Depth [m]	Thickness [m]	c_{ud} [kPa]	α [–]	K [–]	δ [°]	σ_{or} [kPa]	R_{si} [kN]
0,00	-	-	-	-	-	-	-
0,60	0,60	-	-	0,95	17,00	6,02	1,98
0,60	-	-	-	-	-	-	-
1,10	0,50	-	-	0,95	17,00	12,05	3,30

Verification of bearing capacity : NAVFAC DM 7.2

Analysis carried out with automatic selection of the most unfavourable load cases.
Factor determining critical depth k_{dc} = 1,00

Verification of compressive pile:
Most unfavorable load case No. 2. (Dead load)

Pile skin bearing capacity R_s = 5,28 kN
Pile base bearing capacity R_b = 30,03 kN

Pile bearing capacity R_c = 35,30 kN
Ultimate vertical force V_d = 2,00 kN

Safety factor = 17,65 > 2,00

Pile bearing capacity is SATISFACTORY

[GEO5 - Pile (demoversion) | version 5.2020.40.0 | Copyright © 2020 Fine spol. s r.o. All Rights Reserved | www.finesoftware.eu]

Verification No. 1

Analysis of load settlement curve - input data

Layer No.	E_s [MPa]
1	15,00
2	15,00

Maximum pile settlement s_{lim} = 25,0 mm

Analysis of load settlement curve - partial results

Correction factor for pile compressibility	C_k = 0,99
Correction factor for Poisson's ratio of soil	C_v = 0,84
Correction factor for stiffness of bearing stratum	C_b = 1,26
Base-load proportion for incompressible pile	β_0 = 0,70
Proportion of applied load transferred to pile base	β = 0,72

Influence coefficients of settlement :

Basic - dependent on ratio l/d	I_0 = 0,32
Correction factor for pile compressibility	R_k = 1,00
Correction factor for finite depth of layer on a rigid base	R_h = 1,00
Correction factor for Poisson's ratio of soil	R_v = 0,93

Analysis of load settlement curve - results

Load at the onset of mobilization of skin friction	R_{yu} =	19,13	kN
The settlement for the force R_{yu}	s_y =	0,6	mm
Total resistance	R_c =	35,30	kN
Maximum settlement	s_{lim} =	2,0	mm

Verification No. 1

Input data to compute pile horizontal bearing capacity

Analysis carried out with automatic selection of the most unfavourable load cases.
Horizontal bearing capacity verified in the direction of maximum load effect.

Distributions of internal forces and displacement of pile

Pile displacements and internal forces distributions - maximum values

Dist. [m]	Modulus k [MN/m^3]	Displacement [mm]	Rotat. [mRad]	Stress [kPa]	Shear Force [kN]	Moment [kNm]
0.00	0.00	3.92	12.50	0.00	2.50	8.00
0.04	0.00	3.75	12.50	0.00	2.50	8.00
0.07	0.00	3.67	12.50	0.00	2.50	8.00
0.09	0.00	3.58	12.50	0.00	2.50	8.00
0.14	0.00	3.41	12.49	0.00	2.50	8.00
0.16	0.00	3.33	12.49	0.00	2.50	8.00
0.20	0.00	3.16	12.49	0.00	2.50	8.00
0.23	0.00	3.08	12.49	0.00	2.50	8.00
0.25	0.00	3.00	12.49	0.00	2.50	8.00
0.27	0.00	2.91	12.49	0.00	2.50	8.00
0.29	0.00	2.86	12.49	0.00	2.50	8.00
0.31	0.00	2.78	12.49	0.00	2.50	8.00
0.35	0.00	2.61	12.49	0.00	2.50	8.00
0.38	0.00	2.52	12.49	0.00	2.50	8.00
0.40	0.00	2.44	12.48	16.68	2.50	8.00

[GEO5 - Pile (demoversion) | version 5.2020.40.0 | Copyright © 2020 Fine spol. s r.o. All Rights Reserved | www.finesoftware.eu]

Dist. [m]	Modulus k [MN/m3]	Displacement [mm]	Rotat. [mRad]	Stress [kPa]	Shear Force [kN]	Moment [kNm]
0.42	9.67	2.36	12.48	64.02	2.24	7.99
0.44	9.67	2.27	12.48	61.30	1.94	7.97
0.47	9.67	2.19	12.48	58.59	2.39	7.92
0.51	9.67	2.02	12.48	53.15	3.90	7.78
0.53	9.67	1.94	12.48	50.44	4.60	7.68
0.58	9.67	1.77	12.48	45.01	5.88	7.45
0.60	9.67	1.69	12.48	42.29	6.47	7.31
0.62	9.67	1.61	12.48	39.57	7.03	7.16
0.67	9.67	1.44	12.48	34.14	8.02	6.82
0.69	9.67	1.36	12.47	31.43	8.46	6.63
0.73	9.67	1.19	12.47	26.00	9.24	6.23
0.76	9.67	1.11	12.47	23.28	9.57	6.02
0.78	9.67	1.02	12.47	20.57	9.87	5.80
0.80	9.67	0.94	12.47	17.86	10.13	5.58
0.82	9.67	0.86	12.47	15.14	10.35	5.35
0.85	9.67	0.77	12.47	12.43	10.54	5.11
0.89	9.67	0.61	12.47	7.00	10.80	4.63
0.91	9.67	0.52	12.47	5.07	10.88	4.39
0.96	9.67	0.36	12.47	3.45	10.92	3.90
0.98	9.67	0.40	12.47	2.65	10.88	3.65
1.00	9.67	0.59	12.47	2.11	10.84	3.49
1.04	9.67	1.15	12.47	0.50	10.61	3.01
1.06	9.67	1.43	12.47	0.31	10.45	2.77
1.11	9.67	1.99	12.47	1.92	10.00	2.31
1.13	9.67	2.27	12.47	2.73	9.72	2.09
1.15	9.67	2.55	12.47	3.53	9.41	1.87
1.18	9.67	2.83	12.47	4.34	9.06	1.66
1.20	9.67	3.11	12.47	5.14	8.67	1.46
1.22	9.67	3.39	12.47	5.95	8.25	1.27
1.27	9.67	3.95	12.46	7.56	7.29	0.92
1.29	9.67	4.23	12.46	8.37	6.75	0.76
1.33	9.67	4.79	12.46	9.98	5.57	0.49
1.36	9.67	5.07	12.46	10.79	4.93	0.37
1.41	9.67	5.73	12.46	12.67	3.28	0.15
1.43	9.67	6.01	12.46	13.47	2.52	0.09
1.48	9.67	6.57	12.46	15.08	0.88	0.01
1.50	9.67	6.85	12.46	15.89	0.00	0.00

Pile displacements and internal forces distributions - minimum values

Dist. [m]	Modulus k [MN/m3]	Displacement [mm]	Rotat. [mRad]	Stress [kPa]	Shear Force [kN]	Moment [kNm]
0.00	0.00	-11.87	-3.71	0.00	-2.50	-0.00
0.04	0.00	-11.30	-3.71	0.00	-2.50	-0.11
0.07	0.00	-11.02	-3.71	0.00	-2.50	-0.17
0.09	0.00	-10.74	-3.71	0.00	-2.50	-0.22
0.14	0.00	-10.18	-3.71	0.00	-2.50	-0.34
0.16	0.00	-9.90	-3.71	0.00	-2.50	-0.39
0.20	0.00	-9.34	-3.71	0.00	-2.50	-0.51

[GEO5 - Pile (demoversion) | version 5.2020.40.0 | Copyright © 2020 Fine spol. s r.o. All Rights Reserved | www.finesoftware.eu]

Dist. [m]	Modulus k [MN/m^3]	Displacement [mm]	Rotat. [mRad]	Stress [kPa]	Shear Force [kN]	Moment [kNm]
0.23	0.00	-9.05	-3.71	0.00	-2.50	-0.56
0.25	0.00	-8.77	-3.71	0.00	-2.50	-0.62
0.27	0.00	-8.49	-3.71	0.00	-2.50	-0.67
0.29	0.00	-8.30	-3.71	0.00	-2.50	-0.71
0.31	0.00	-8.02	-3.71	0.00	-2.50	-0.77
0.35	0.00	-7.46	-3.71	0.00	-2.50	-0.88
0.38	0.00	-7.18	-3.71	0.00	-2.50	-0.94
0.40	0.00	-6.90	-3.71	-5.90	-2.50	-0.99
0.42	9.67	-6.62	-3.71	-22.81	-2.24	-1.05
0.44	9.67	-6.34	-3.71	-22.00	-1.94	-1.09
0.47	9.67	-6.06	-3.71	-21.19	-1.65	-1.13
0.51	9.67	-5.50	-3.71	-19.58	-1.09	-1.20
0.53	9.67	-5.21	-3.71	-18.77	-0.84	-1.22
0.58	9.67	-4.65	-3.71	-17.16	-0.35	-1.24
0.60	9.67	-4.37	-3.71	-16.36	-0.12	-1.25
0.62	9.67	-4.09	-3.71	-15.55	-0.09	-1.25
0.67	9.67	-3.53	-3.71	-13.94	-0.49	-1.24
0.69	9.67	-3.25	-3.71	-13.13	-0.67	-1.22
0.73	9.67	-2.69	-3.71	-11.52	-1.00	-1.19
0.76	9.67	-2.41	-3.71	-10.71	-1.15	-1.16
0.78	9.67	-2.13	-3.71	-9.90	-1.29	-1.13
0.80	9.67	-1.85	-3.70	-9.10	-1.42	-1.10
0.82	9.67	-1.57	-3.70	-8.29	-1.54	-1.07
0.85	9.67	-1.28	-3.70	-7.49	-1.65	-1.03
0.89	9.67	-0.72	-3.70	-5.87	-1.83	-0.96
0.91	9.67	-0.52	-3.70	-5.07	-1.90	-0.91
0.96	9.67	-0.36	-3.70	-3.45	-2.01	-0.83
0.98	9.67	-0.27	-3.70	-3.85	-2.06	-0.78
1.00	9.67	-0.22	-3.70	-5.66	-2.08	-0.75
1.04	9.67	-0.05	-3.70	-11.09	-2.11	-0.65
1.06	9.67	-0.03	-3.70	-13.80	-2.11	-0.61
1.11	9.67	-0.20	-3.70	-19.23	-2.08	-0.51
1.13	9.67	-0.28	-3.70	-21.94	-2.05	-0.47
1.15	9.67	-0.37	-3.70	-24.65	-2.01	-0.42
1.18	9.67	-0.45	-3.70	-27.37	-1.96	-0.38
1.20	9.67	-0.53	-3.70	-30.08	-1.89	-0.33
1.22	9.67	-0.62	-3.70	-32.79	-1.82	-0.29
1.27	9.67	-0.78	-3.70	-38.22	-1.64	-0.21
1.29	9.67	-0.87	-3.70	-40.93	-1.53	-0.18
1.33	9.67	-1.03	-3.70	-46.36	-1.28	-0.11
1.36	9.67	-1.12	-3.70	-49.07	-1.14	-0.09
1.41	9.67	-1.31	-3.70	-55.40	-0.77	-0.04
1.43	9.67	-1.39	-3.70	-58.11	-0.59	-0.02
1.48	9.67	-1.56	-3.70	-63.54	-0.21	-0.00
1.50	9.67	-1.64	-3.70	-66.25	-0.00	-0.00

Maximum internal force and deformation :

Max. pile displacement = 11,9 mm
Max. shear force = 10,92 kN

[GEO5 - Pile (demoversion) | version 5.2020.40.0 | Copyright © 2020 Fine spol. s r.o. All Rights Reserved | www.finesoftware.eu]

Maximum moment = 8,00 kNm

Verification of cross section in bending:

Reinforcement - 8 pc bars 16,0 mm; cover 75,0 mm
Type of structure (reinforcement ratio) : pile
Reinforcement ratio ρ = 0,569 % > 0,500 % = ρ_{min}
Load : M_{Ed} = 8,00 kNm
Bearing capacity : M_{Rd} = 165,33 kNm
Designed pile reinforcement is SATISFACTORY

Verification of cross section in shear:

Ultimate shear force: V_{Rd} = 110,77 kN > 10,92 kN = V_{Ed}
Cross-section is SATISFACTORY.

Reinforcement drawing

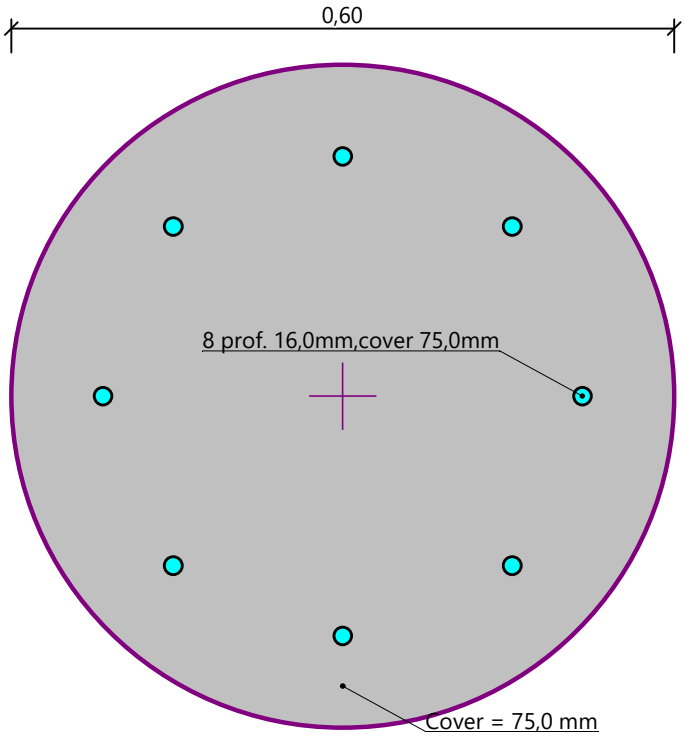

[GEO5 - Pile (demoversion) | version 5.2020.40.0 | Copyright © 2020 Fine spol. s r.o. All Rights Reserved | www.finesoftware.eu]

Designer:
Company:
Address:
Phone:
E-Mail:
Name:

Project:
Title: New Project
Location:
Contact Person:
Comments:
Design Norm: EN Eurocodes (without NA)
Unit system: SI

This design applies exclusively to proprietary PEIKKO products and can't be used to validate properties of third party products, might they appear to be identical.

Summary

Name	Stage	#	Load Case	Page No.	Max Utilization	Status
Column 1	Final	1	Nd=-118,0, Mxd=0,0, Myd=5,0, Vxd=6,8, Vyd=27,5	4	14%	OK
	Final	2	Nd=-29,0, Mxd=7,3, Myd=0,0, Vxd=1,5, Vyd=10,3	5	30%	OK

Column 1

Note:

Number of Columns: 1

Peikko Products

Bolts: 4 x HPM20L

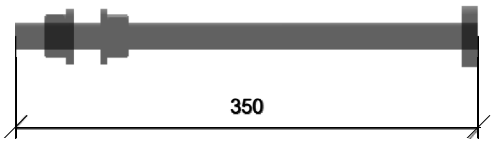

Totals

Product	Amount
HPM20L	4

Minimum required torque value of nuts : T_{min} = 150 Nm
Maximum allowed torque value of nuts : T_{max} = 250 Nm

Bolt installation template: PPL20-4 200x200

Materials and Geometry

Column: 150x200

f_{cd}= 20 N/mm²

Plane View

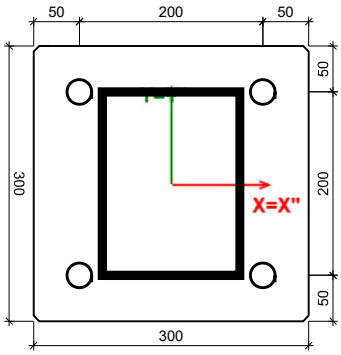

X"-axis view

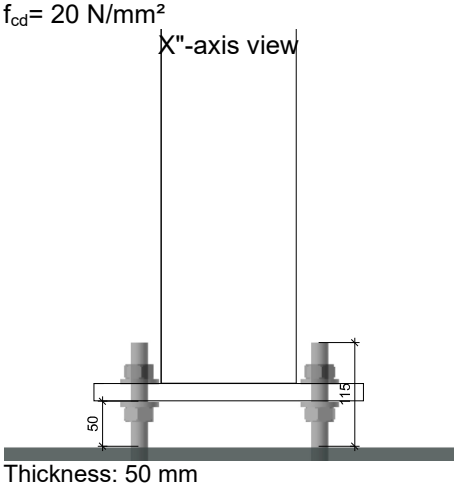

Y"-axis view

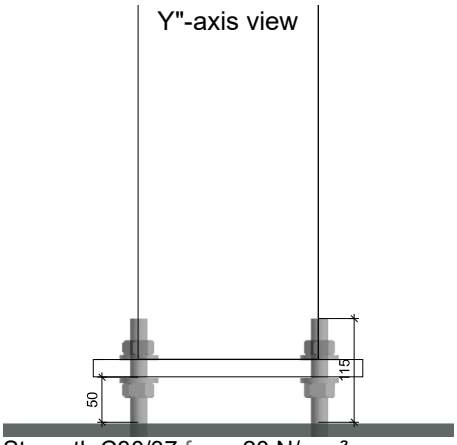

Grouting:

Thickness: 50 mm

Strength C30/37 f_{cd} = 20 N/mm²

X; Y = local coordinate system of profile
X"; Y" = local coordinate system of anchors

Load Cases

NOTE: Loads are defined in the local coordinate system of the profile.

(Design loads)

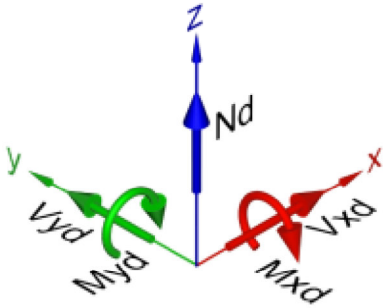

Final Stage

#	Name	N_d [kN]	M_{xd} [kNm]	M_{yd} [kNm]	V_{xd} [kN]	V_{yd} [kN]
1		-118,0	0,0	5,0	6,8	27,5
2		-29,0	7,3	0,0	1,5	10,3

Erection stage

No load case for this stage defined

Resistance Diagrams

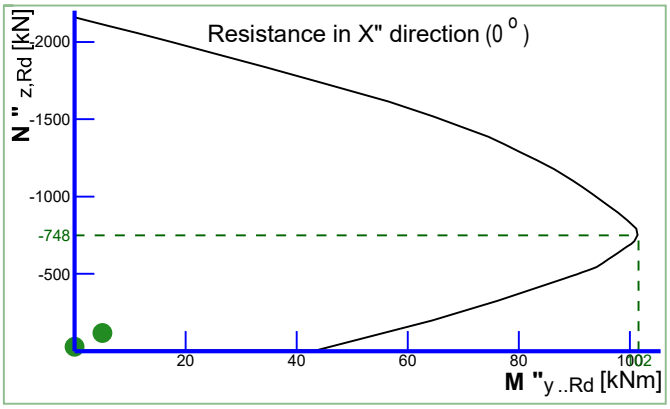

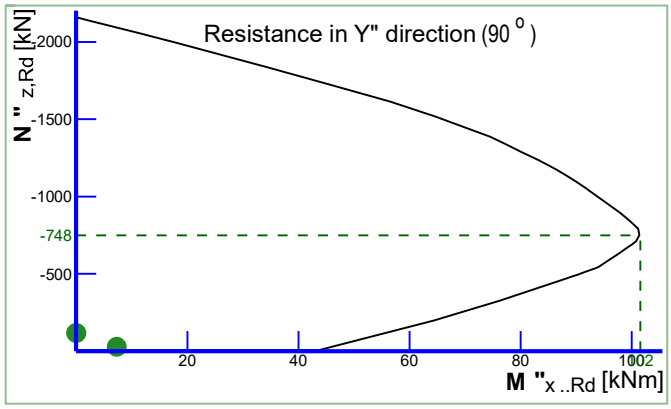

Base Structure

Concrete	C35/45
Uncracked	No
Aggregate size	16 mm
Base column dimension X-axis direction (b)	450 mm
Base column dimension Y-axis direction (h)	2000 mm
Height of Base column	1200 mm
Eccentricity of bolted column (e_x)	0 mm
Eccentricity of bolted column (e_y)	0 mm

Anchor Bolts Failure Verifications

Final Stage Bolts

Load Case #1 : Nd=-118,0, Mxd=0,0, Myd=5,0, Vxd=6,8, Vyd=27,5

Steel Failure: Sufficient capacity **Concrete failure: Sufficient capacity**

Steel failure verification

Design value of normal compressive force in the column	$N_{c,Ed}$	-118	kN
Friction coefficient (between base plate and grout layer)	C_{fd}	0,2	
Joint friction resistance	$F_{f,Rd}$	23,6	kN
Resultant shear force	V_{sd}	28,33	kN
Resultant shear force taking account friction contribution	$V_{sd,f}$	4,73	kN

Resultant compression force (concrete) in (X"/Y") = F_{cc}(41,4/0,0)

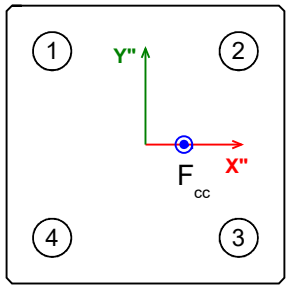

Bolt Pos.	Acting axial force [kN]	Design tension resistance [kN]	Axial capacity usage [%]	Acting shear force [kN]	Design shear resistance [kN]	Shear capacity usage [%]	Interaction [%]
1	-1,30	88,2	1,5	1,18	31,3	3,8	n/r
2	-4,66	88,2	5,3	1,18	31,3	3,8	n/r
3	-4,66	88,2	5,3	1,18	31,3	3,8	n/r
4	-1,29	88,2	1,5	1,18	31,3	3,8	n/r

Concrete failure verifications

Proof	Load [kN]	Capacity [kN]	Utilization [%]	Status
Pull-Out Failure	0,0	0,0	0,0	Ok
Cone failure				Ok
Concrete decisive:				

1) Foundation (Plain Concrete)	0,0	0,0	n/r	
2) Assigned Hanger Reinforcement	0,0	0,0	n/r	
3) Requirement of Strut and Tie Model	0,0	0,0	n/r	
Splitting Failure				Ok
Concrete decisive:				
1) Foundation (Plain Concrete)	0,0	0,0	n/r	
2)Assigned Splitting Reinforcement || X	0,0	0,0	-	
3)Assigned Splitting Reinforcement || Y	0,0	0,0	-	
Blow-Out Failure	0,0	0,0	n/r	Ok
Pry-out failure	4,7	165,9	2,9	Ok
Edge failure				Ok
Concrete decisive:				
1) -X (Left) Edge (Plain Concrete)	2,3	62,4	3,7	
2) +X (Right) Edge (Plain Concrete)	2,4	57,6	4,1	
3) +Y (Top) Edge (Plain Concrete)	4,7	34,8	13,6	
4) -Y (Bottom) Edge (Plain Concrete)	1,1	68,0	1,7	
5)Assigned Edge Reinforcement (-X)	1,6	0,0	n/r	
6)Assigned Edge Reinforcement (+X)	1,8	0,0	n/r	
7)Assigned Edge Reinforcement (+Y)	2,8	0,0	n/r	
8)Assigned Edge Reinforcement (-Y)	0,3	0,0	n/r	
Combined Resistance	$\beta_V \leq 1$		13,6	Ok

Explanation:

n/r - Verification of failure mode not required

n/a - Not applicable failure mode

(-) - Failure mode has no resistance to actions

Load Case #2 : Nd=-29,0, Mxd=7,3, Myd=0,0, Vxd=1,5, Vyd=10,3

Steel Failure: Sufficient capacity **Concrete failure: Sufficient capacity**

Steel failure verification

Design value of normal compressive force in the column	$N_{c,Ed}$	-29	kN
Friction coefficient (between base plate and grout layer)	C_{fd}	0,2	
Joint friction resistance	$F_{f,Rd}$	5,8	kN
Resultant shear force	V_{sd}	10,41	kN
Resultant shear force taking account friction contribution	$V_{sd,f}$	4,61	kN

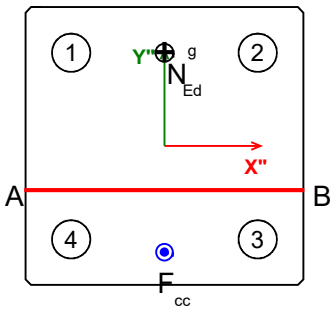

Neutral axis in (X"/Y") = A(-150,0 / -46,5); B(150,0 / -46,4)
Resultant tension force in (X"/Y") = N^{g}_{Ed}(0,0/100,0)
Resultant compression force (concrete) in (X"/Y") = F_{cc}(0,0/-113,6)

Bolt Pos.	Acting axial force [kN]	Design tension resistance [kN]	Axial capacity usage [%]	Acting shear force [kN]	Design shear resistance [kN]	Shear capacity usage [%]	Interaction [%]
1	9,58	88,2	10,9	1,15	31,3	3,7	11,4
2	9,58	88,2	10,9	1,15	31,3	3,7	11,4
3	-3,50	88,2	4,0	1,15	31,3	3,7	n/r
4	-3,50	88,2	4,0	1,15	31,3	3,7	n/r

Concrete failure verifications

Proof	Load [kN]	Capacity [kN]	Utilization [%]	Status
Pull-Out Failure	9,6	235,9	4,1	Ok
Cone failure				Ok
Concrete decisive:				

1) Foundation (Plain Concrete)	19,2	63,9	30,0	
2) Assigned Hanger Reinforcement	0,0	0,0	n/r	
3) Requirement of Strut and Tie Model	0,0	0,0	n/r	
Splitting Failure				Ok
Concrete decisive:				
1) Foundation (Plain Concrete)	19,2	75,4	25,4	
2)Assigned Splitting Reinforcement || X	0,0	0,0	-	
3)Assigned Splitting Reinforcement || Y	0,0	0,0	-	
Blow-Out Failure	0,0	0,0	n/r	Ok
Pry-out failure	4,6	165,9	2,8	Ok
Edge failure				Ok
Concrete decisive:				
1) -X (Left) Edge (Plain Concrete)	2,3	62,4	3,7	
2) +X (Right) Edge (Plain Concrete)	2,3	60,5	3,8	
3) +Y (Top) Edge (Plain Concrete)	4,6	34,3	13,4	
4) -Y (Bottom) Edge (Plain Concrete)	0,7	68,0	1,0	
5)Assigned Edge Reinforcement (-X)	1,6	0,0	n/r	
6)Assigned Edge Reinforcement (+X)	1,7	0,0	n/r	
7)Assigned Edge Reinforcement (+Y)	2,8	0,0	n/r	
8)Assigned Edge Reinforcement (-Y)	0,2	0,0	n/r	
Combined Resistance	$\beta_N+\beta_V\leq 1.2$ or $\beta_N^{1.5}+\beta_V^{1.5}\leq 1$		21,4	Ok

Explanation:

n/r - Verification of failure mode not required

n/a - Not applicable failure mode

(-) - Failure mode has no resistance to actions

Project:
Project no:
Author:

Con. D4 (SP.BR-02)

Design

Name	CON1
Description	
Analysis	Stress, strain/ loads in equilibrium

Members

Geometry

Name	Cross-section	β – Direction [°]	γ - Pitch [°]	α - Rotation [°]	Offset ex [mm]	Offset ey [mm]	Offset ez [mm]
C	4 - SHS150/150/10.0	0.0	0.0	0.0	0	0	0
V	2 - RHS150/100/8(RHS150/100/8.0)	0.0	90.0	90.0	0	0	0
D	3 - RHS100/60/6(RHS100/60/6.3)	0.0	45.0	0.0	0	25	0

Supports and forces

Name	Support	Forces in	X [mm]
C / end	N-Vy-Vz-Mx-My-Mz	Node	0
V / end		Node	0
D / end		Node	0

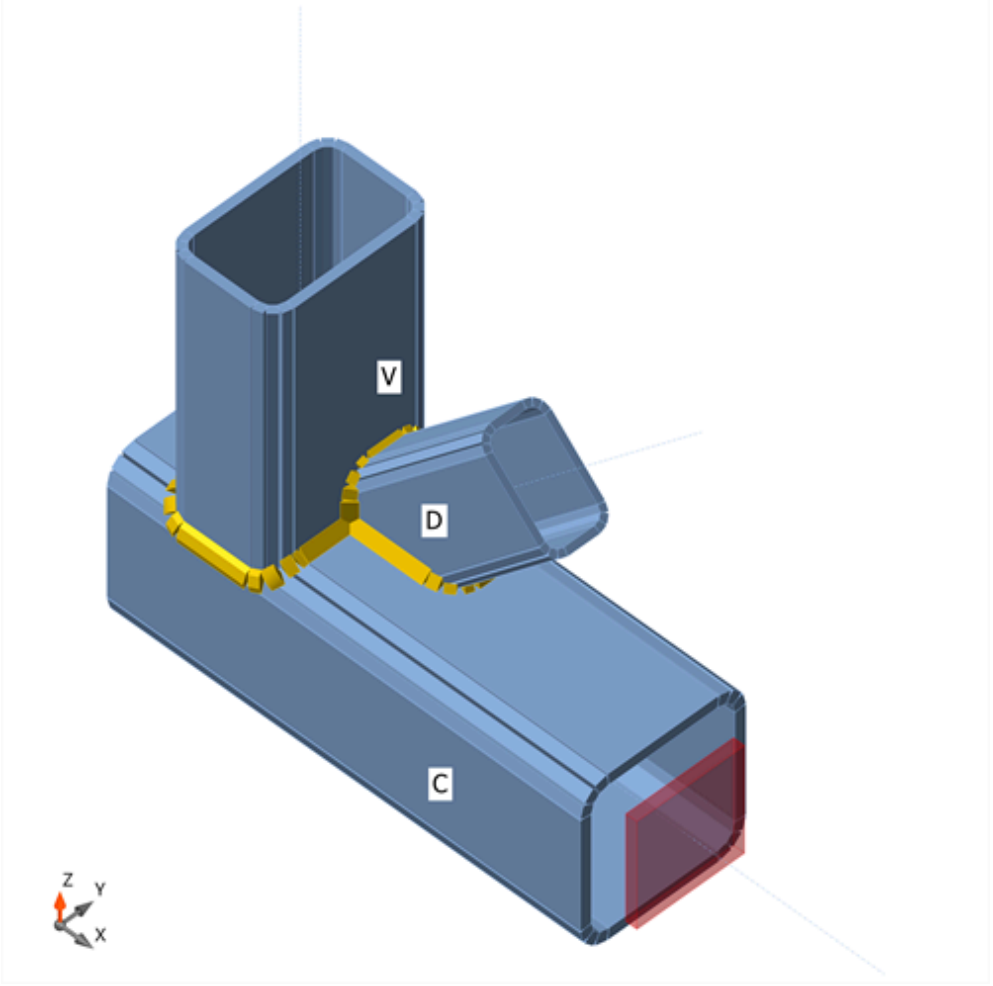

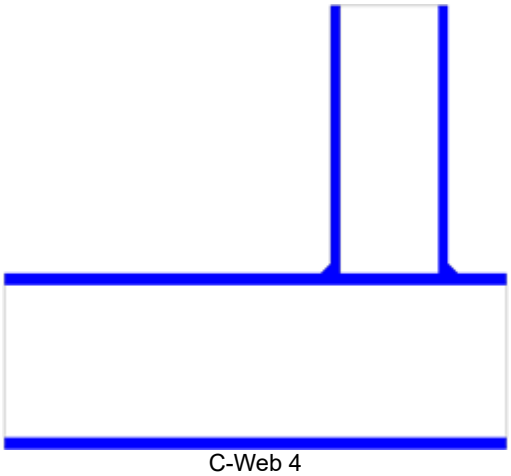

C-Web 4

Cross-sections

Name	Material
4 - SHS150/150/10.0	S 355
2 - RHS150/100/8(RHS150/100/8.0)	S 355
3 - RHS100/60/6(RHS100/60/6.3)	S 355

Load effects (forces in equilibrium)

Name	Member	N [kN]	Vy [kN]	Vz [kN]	Mx [kNm]	My [kNm]	Mz [kNm]
LE1	C / End	0.0	0.0	0.0	0.0	0.0	0.0
	V / End	6.5	0.0	0.0	0.0	-26.4	2.6
	D / End	15.7	0.0	0.0	0.0	0.0	0.0

Unbalanced forces

Name	X [kN]	Y [kN]	Z [kN]	Mx [kNm]	My [kNm]	Mz [kNm]
LE1	11.1	0.0	17.6	26.7	-2.6	-0.3

Check

Summary

Name	Value	Check status
Analysis	100.0%	OK
Plates	2.4 < 5.0%	OK
Loc. deformation	1.4 < 3%	OK
Welds	98.5 < 100%	OK
Buckling	Not calculated	
GMNA	Calculated	

Plates

Name	t_p [mm]	Loads	σ_{Ed} [MPa]	ε_{Pl} [%]	$\sigma_{c,Ed}$ [MPa]	Status
C	10.0	LE1	360.1	2.4	0.0	OK
V	8.0	LE1	358.2	1.5	0.0	OK
D	6.3	LE1	355.2	0.1	0.0	OK

Design data

Material	f_y [MPa]	ε_{lim} [%]
S 355	355.0	5.0

Symbol explanation

t_p	Plate thickness
σ_{Ed}	Equivalent stress
ε_{Pl}	Plastic strain
$\sigma_{c,Ed}$	Contact stress
f_y	Yield strength
ε_{lim}	Limit of plastic strain

Loc. deformation

Name	d_0 [mm]	Loads	δ [mm]	δ_{lim} [mm]	δ/d_0 [%]	Check status
C	150	LE1	2	5	1.4	OK
V	100	LE1	0	3	0.1	OK
D	60	LE1	0	2	0.0	OK

Symbol explanation

d_0	Cross-section size
δ	Local cross-section deformation
δ_{lim}	Allowed deformation

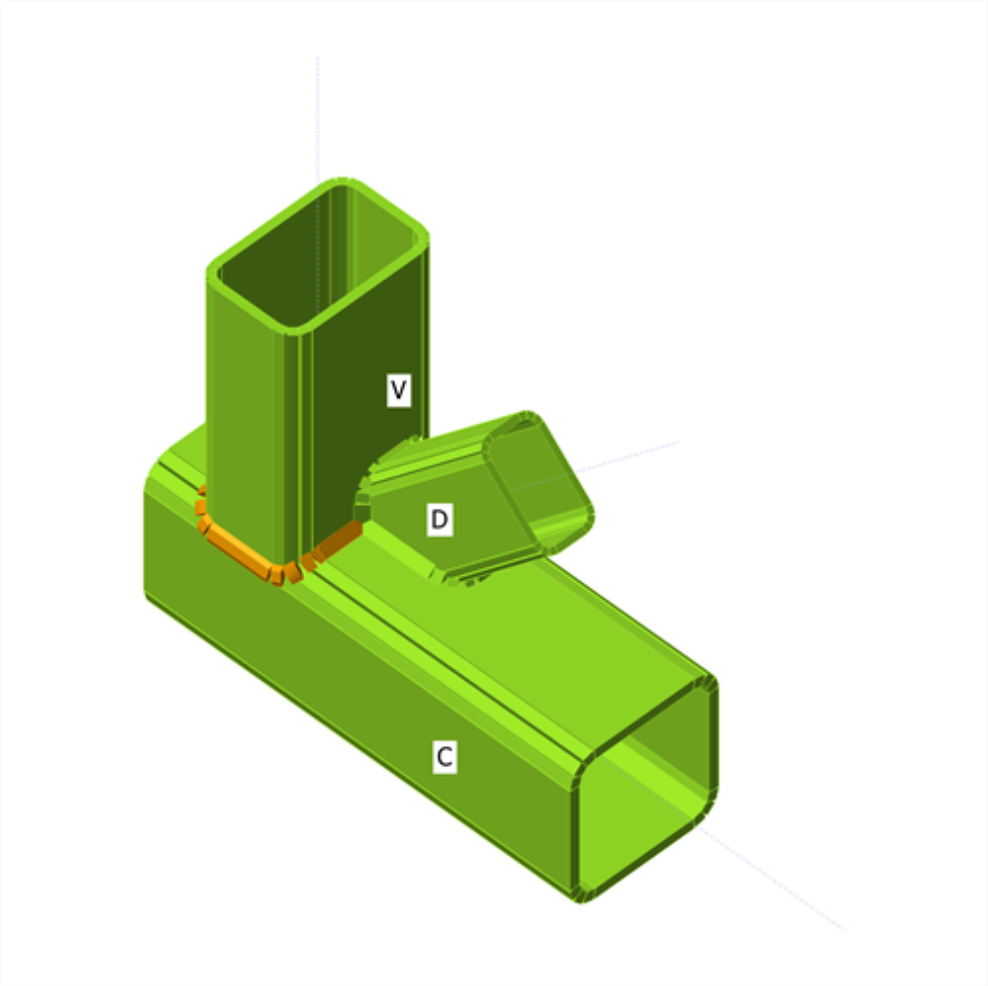

Overall check, LE1

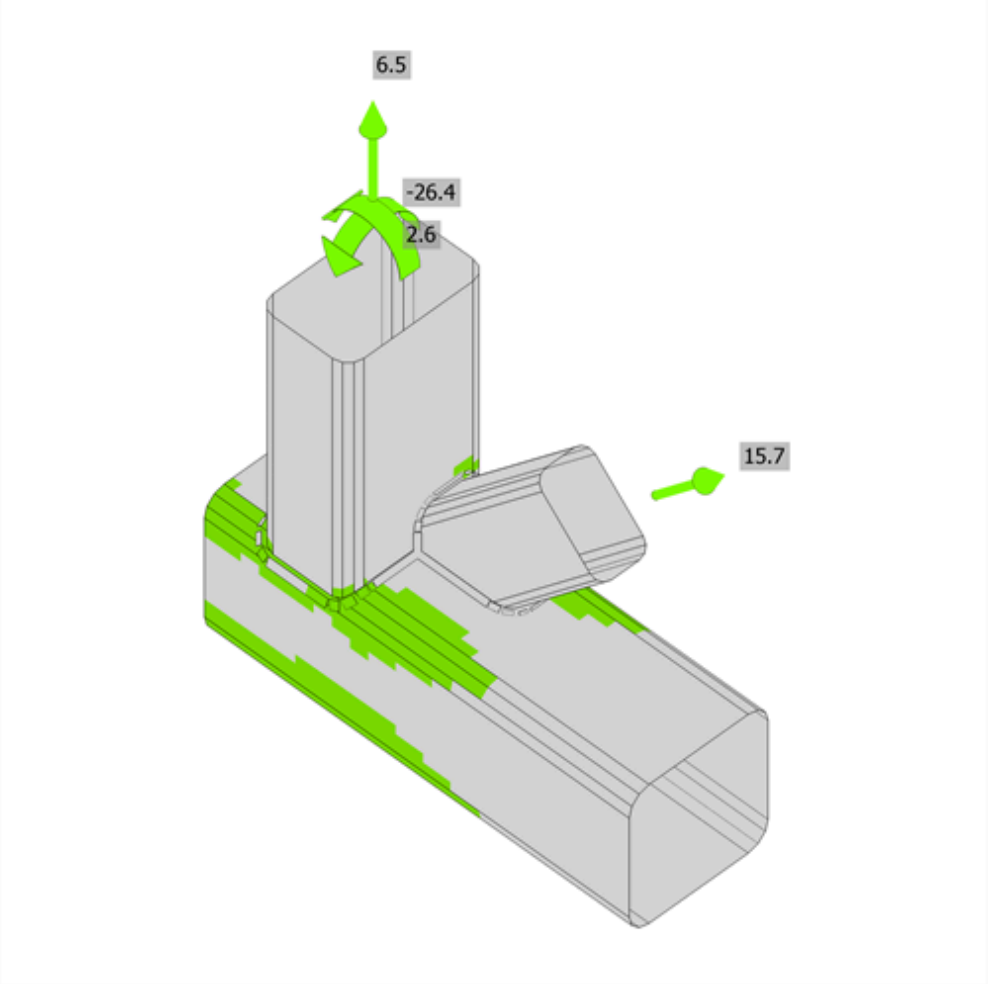

Strain check, LE1

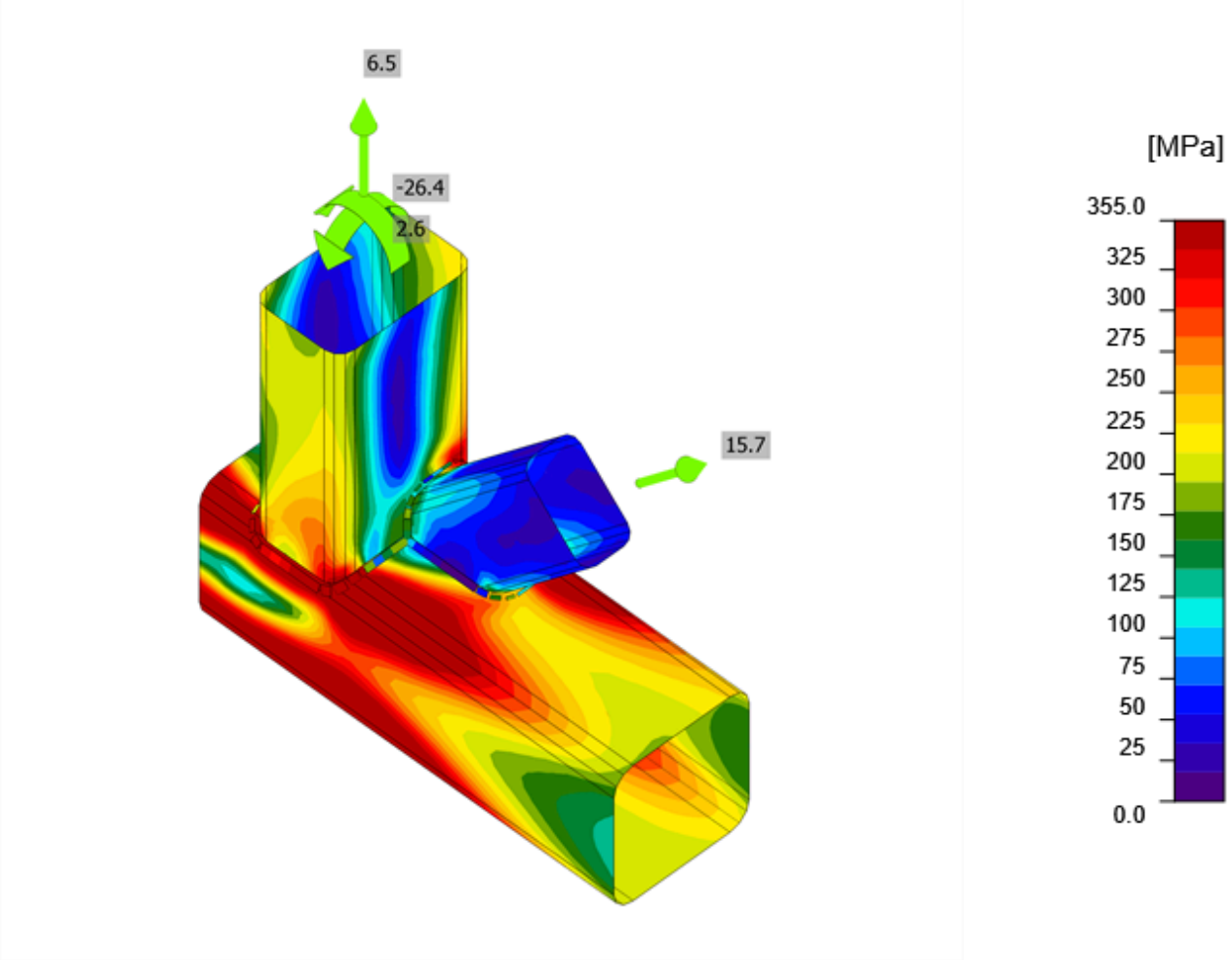

Equivalent stress, LE1

Welds

Item	Edge	T_w [mm]	L [mm]	Loads	$\sigma_{w,Ed}$ [MPa]	ε_{Pl} [%]	$\sigma_{\perp}$ [MPa]	$\tau_{\perp}$ [MPa]	$\tau_{\parallel}$ [MPa]	Ut [%]	Ut_c [%]	Detailing	Status
C-w 3	D	◢ 6.0	222	LE1	322.1	0.0	123.2	-29.9	-169.2	74.0	41.2	OK	OK
C-arc 5	V	◢ 6.0	446	LE1	429.2	1.3	223.5	-102.4	-185.1	98.5	87.7	OK	OK
V-w 4	D	◢ 6.0	123	LE1	361.6	0.0	231.4	34.0	-156.7	83.0	56.2	OK	OK

Design data

Material	f_u [MPa]	β_w [-]	$\sigma_{w,Rd}$ [MPa]	0.9 σ [MPa]
S 355	490.0	0.90	435.6	352.8

Symbol explanation

T_w	Throat thickness a
L	Length
$\sigma_{w,Ed}$	Equivalent stress
ε_{Pl}	Strain
$\sigma_{\perp}$	Perpendicular stress
$\tau_{\perp}$	Shear stress perpendicular to weld axis
$\tau_{\parallel}$	Shear stress parallel to weld axis
Ut	Utilization
Ut_c	Weld capacity estimation
◢	Fillet weld
f_u	Ultimate strength of weld
β_w	Correlation factor EN 1993-1-8 – Tab. 4.1
$\sigma_{w,Rd}$	Equivalent stress resistance
0.9 σ	Perpendicular stress resistance: 0.9*fu/γM2

Buckling

Buckling analysis was not calculated.

Code settings

Item	Value	Unit	Reference
Safety factor γ_{M0}	1.00	-	EN 1993-1-1 – 6.1
Safety factor γ_{M1}	1.00	-	EN 1993-1-1 – 6.1
Safety factor γ_{M2}	1.25	-	EN 1993-1-1 – 6.1, EN 1993-1-8 – Table 2.1
Safety factor γ_{M3}	1.25	-	EN 1993-1-8 – Table 2.1
Safety factor γ_C	1.50	-	EN 1992-1-1 – 2.4.2.4
Safety factor γ_{Inst}	1.20	-	EN 1992-4 – Table 4.1
Joint coefficient βj	0.67	-	EN 1993-1-8 – 6.2.5(7)
Effective area - influence of mesh size	0.10	-	
Friction coefficient - concrete	0.25	-	EN 1993-1-8
Friction coefficient in slip-resistance	0.30	-	EN 1993-1-8 – Table 3.7
Limit plastic strain	0.05	-	EN 1993-1-5
Detailing	Yes		
Distance between bolts [d0]	2.20	-	EN 1993-1-8 – Table 3.3
Distance between bolts and edge [d0]	1.20	-	EN 1993-1-8 – Table 3.3
Concrete breakout resistance check	Both		
Cracked concrete	Yes		EN 1992-4
Local deformation check	Yes		
Local deformation limit	0.03	-	CIDECT DG 1, 3 – 1.1
Geometrical nonlinearity (GMNA)	Yes		Analysis with large deformations for hollow section joints
Braced system	No		EN 1993-1-8 – 5.2.2.5

Project:
Project no:
Author:

Con. D6 (SP.BR-02)

Design

Name	CON4
Description	
Analysis	Stress, strain/ loads in equilibrium

Members

Geometry

Name	Cross-section	β – Direction [°]	γ - Pitch [°]	α - Rotation [°]	Offset ex [mm]	Offset ey [mm]	Offset ez [mm]
C	4 - SHS150/150/10.0	0.0	90.0	0.0	0	0	0
B	2 - RHS150/100/8(RHS150/100/8.0)	0.0	0.0	90.0	0	0	0
M3	2 - RHS150/100/8(RHS150/100/8.0)	90.0	37.7	90.0	0	20	0
M4	2 - RHS150/100/8(RHS150/100/8.0)	90.0	-37.7	90.0	0	-20	0

Supports and forces

Name	Support	Forces in	X [mm]
C / begin	N-Vy-Vz-Mx-My-Mz	Node	0
C / end		Node	0
B / end		Node	0
M3 / end		Node	0
M4 / end		Node	0

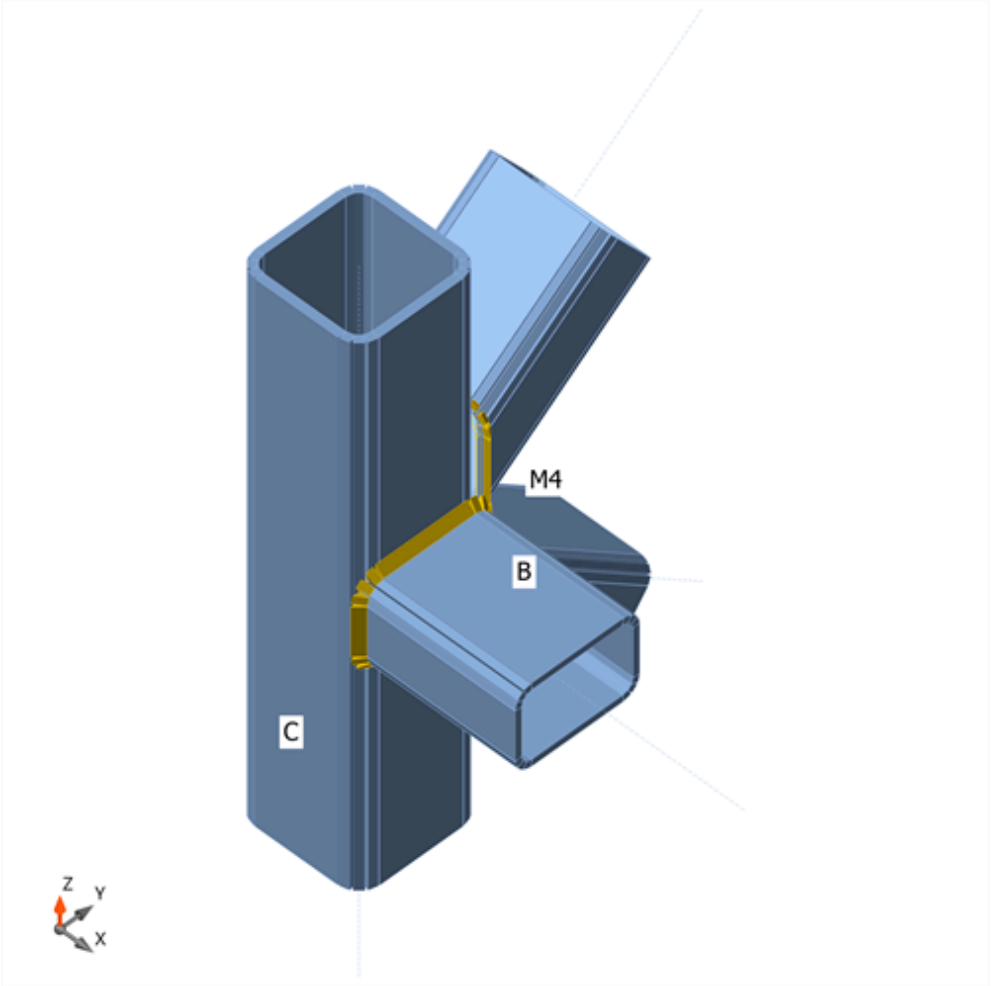

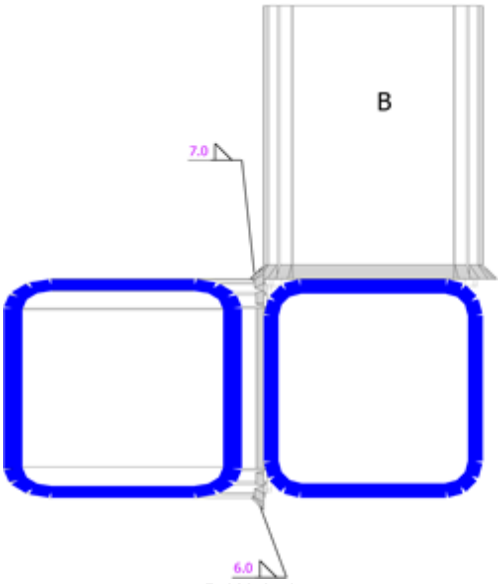

B-Web 4

Cross-sections

Name	Material
4 - SHS150/150/10.0	S 355
2 - RHS150/100/8(RHS150/100/8.0)	S 355

Load effects (forces in equilibrium)

Name	Member	N [kN]	Vy [kN]	Vz [kN]	Mx [kNm]	My [kNm]	Mz [kNm]
LE1	C / End	-51.6	0.0	0.0	0.0	0.0	0.0
	B / End	0.0	0.0	-26.2	0.0	20.9	0.0
	M3 / End	-18.0	0.0	0.0	0.0	-10.6	0.0
	M4 / End	-18.0	0.0	0.0	0.0	-10.6	0.0
	C / Begin	0.0	0.0	0.0	0.0	0.0	0.0

Unbalanced forces

Name	X [kN]	Y [kN]	Z [kN]	Mx [kNm]	My [kNm]	Mz [kNm]
LE1	0.0	-2.3	-51.6	0.0	0.0	4.1

Check

Summary

Name	Value	Check status
Analysis	100.0%	OK
Plates	0.3 < 5.0%	OK
Loc. deformation	0.5 < 3%	OK
Welds	98.0 < 100%	OK
Buckling	Not calculated	
GMNA	Calculated	

Plates

Name	t_p [mm]	Loads	σ_{Ed} [MPa]	ε_{Pl} [%]	$\sigma_{c,Ed}$ [MPa]	Status
C	10.0	LE1	355.6	0.3	0.0	OK
B	8.0	LE1	352.1	0.1	0.0	OK
M3	8.0	LE1	355.5	0.3	0.0	OK
M4	8.0	LE1	355.5	0.3	0.0	OK

Design data

Material	f_y [MPa]	ε_{lim} [%]
S 355	355.0	5.0

Symbol explanation

t_p	Plate thickness
σ_{Ed}	Equivalent stress
ε_{Pl}	Plastic strain
$\sigma_{c,Ed}$	Contact stress
f_y	Yield strength
ε_{lim}	Limit of plastic strain

Loc. deformation

Name	d_0 [mm]	Loads	δ [mm]	$δ_{lim}$ [mm]	$δ/d_0$ [%]	Check status
C	150	LE1	1	5	0.5	OK
B	100	LE1	0	3	0.1	OK
M3	100	LE1	0	3	0.2	OK
M4	100	LE1	0	3	0.1	OK

Symbol explanation

d_0	Cross-section size
δ	Local cross-section deformation
$δ_{lim}$	Allowed deformation

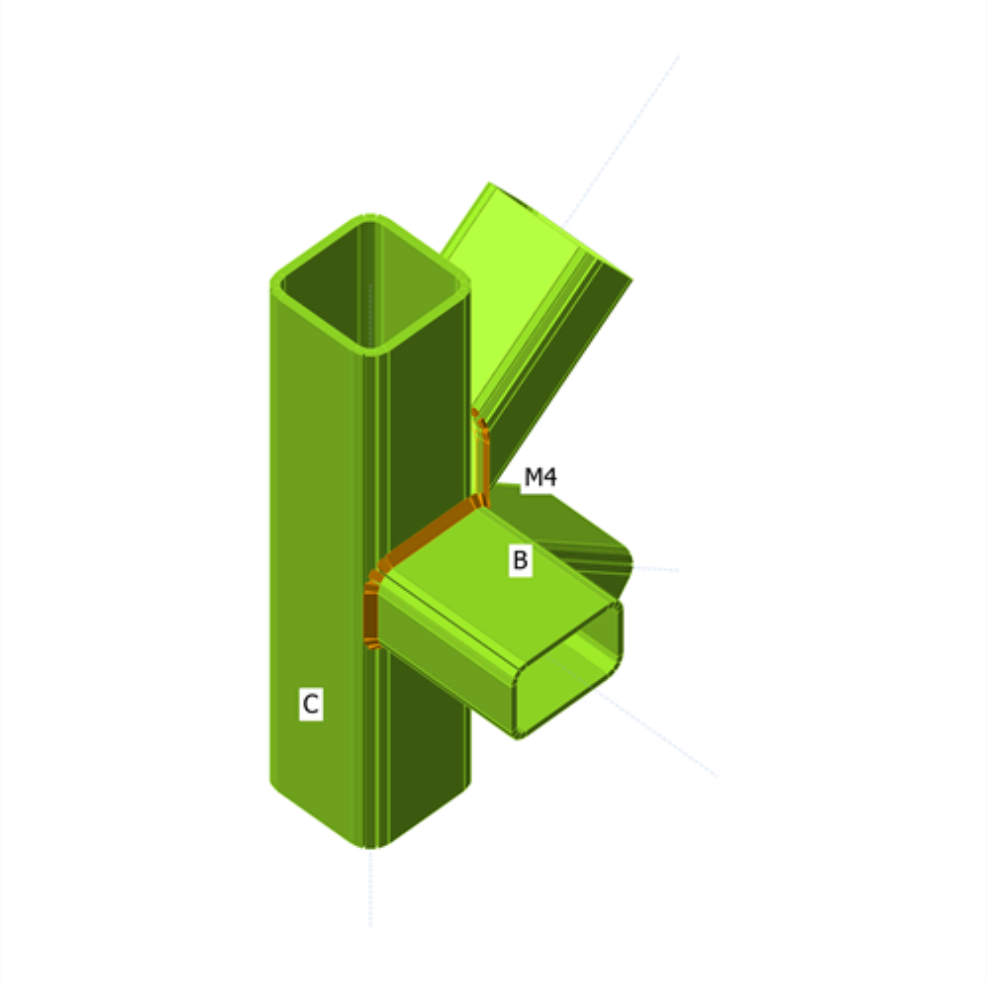

Overall check, LE1

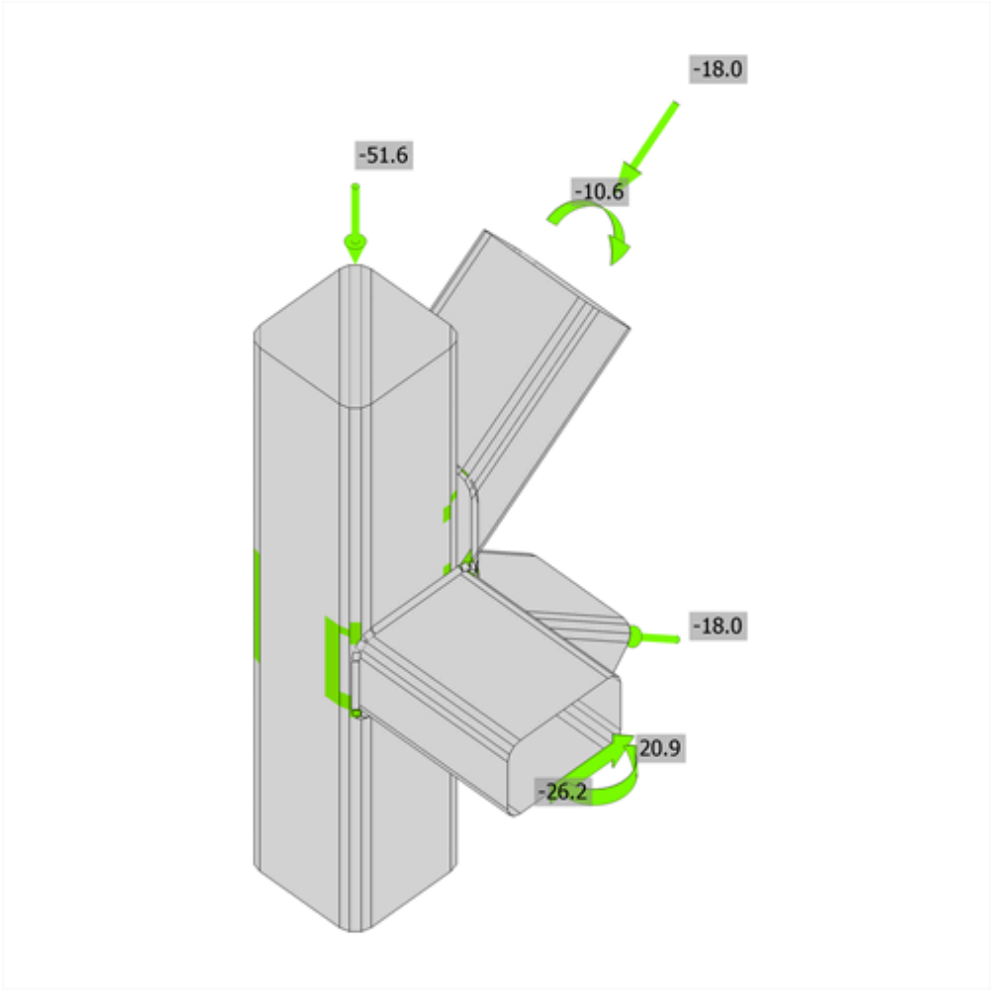

Strain check, LE1

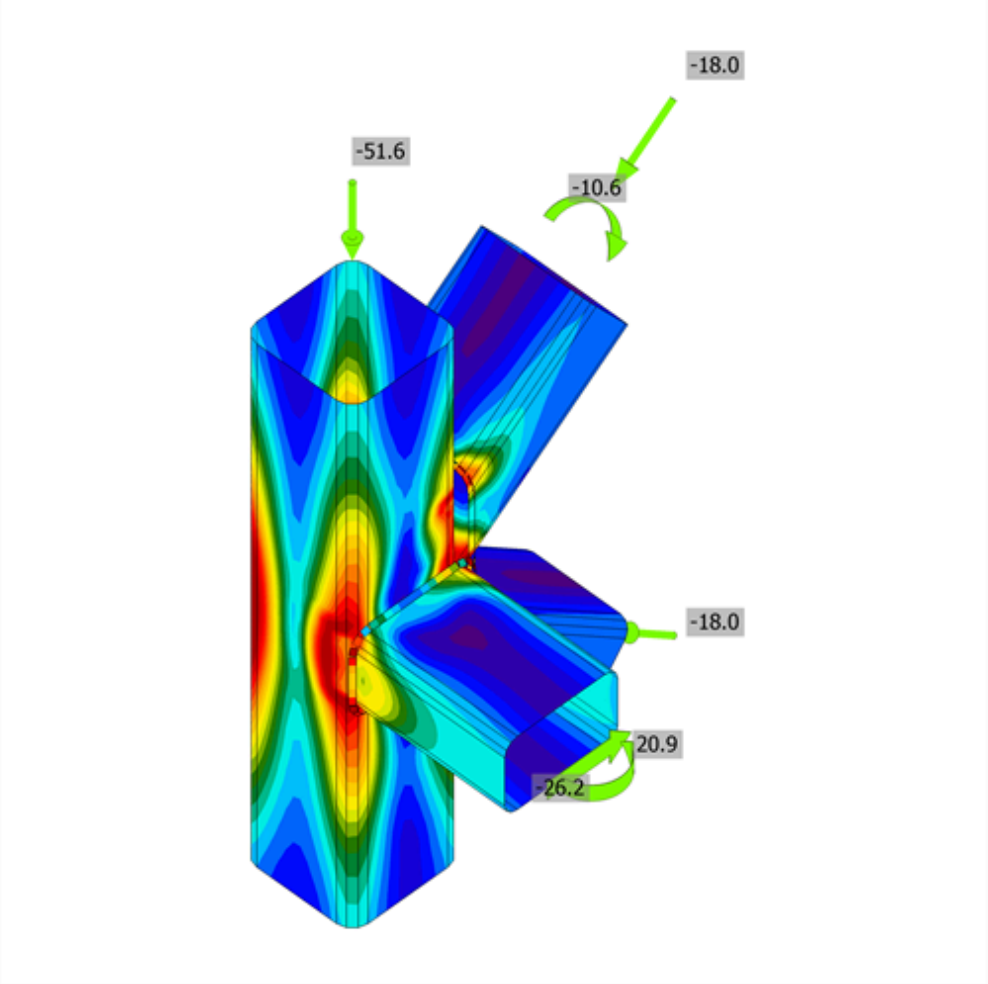

Equivalent stress, LE1

Welds

Item	Edge	T_w [mm]	L [mm]	Loads	$\sigma_{w,Ed}$ [MPa]	ε_{Pl} [%]	$\sigma_{\perp}$ [MPa]	$\tau_{\perp}$ [MPa]	$\tau_{\parallel}$ [MPa]	Ut [%]	Ut_c [%]	Detailing	Status
C-w 1	B	◢ 7.0	436	LE1	427.0	0.1	-338.8	138.9	56.8	98.0	72.4	OK	OK
C-w 2	M3	◢ 6.0	482	LE1	426.9	0.1	-57.7	202.6	136.4	98.0	57.7	OK	OK
C-w 2	M4	◢ 6.0	482	LE1	426.9	0.0	-51.5	203.8	-135.4	98.0	62.4	OK	OK

Design data

Material	f_u [MPa]	β_w [-]	$\sigma_{w,Rd}$ [MPa]	0.9 σ [MPa]
S 355	490.0	0.90	435.6	352.8

Symbol explanation

T_w	Throat thickness a
L	Length
$\sigma_{w,Ed}$	Equivalent stress
ε_{Pl}	Strain
$\sigma_{\perp}$	Perpendicular stress
$\tau_{\perp}$	Shear stress perpendicular to weld axis
$\tau_{\parallel}$	Shear stress parallel to weld axis
Ut	Utilization
Ut_c	Weld capacity estimation
◢	Fillet weld
f_u	Ultimate strength of weld
β_w	Correlation factor EN 1993-1-8 – Tab. 4.1
$\sigma_{w,Rd}$	Equivalent stress resistance
0.9 σ	Perpendicular stress resistance: 0.9*fu/γM2

Buckling

Buckling analysis was not calculated.

Code settings

Item	Value	Unit	Reference
Safety factor γ_{M0}	1.00	-	EN 1993-1-1 – 6.1
Safety factor γ_{M1}	1.00	-	EN 1993-1-1 – 6.1
Safety factor γ_{M2}	1.25	-	EN 1993-1-1 – 6.1, EN 1993-1-8 – Table 2.1
Safety factor γ_{M3}	1.25	-	EN 1993-1-8 – Table 2.1
Safety factor γ_C	1.50	-	EN 1992-1-1 – 2.4.2.4
Safety factor γ_{Inst}	1.20	-	EN 1992-4 – Table 4.1
Joint coefficient βj	0.67	-	EN 1993-1-8 – 6.2.5(7)
Effective area - influence of mesh size	0.10	-	
Friction coefficient - concrete	0.25	-	EN 1993-1-8
Friction coefficient in slip-resistance	0.30	-	EN 1993-1-8 – Table 3.7
Limit plastic strain	0.05	-	EN 1993-1-5
Detailing	Yes		
Distance between bolts [d0]	2.20	-	EN 1993-1-8 – Table 3.3
Distance between bolts and edge [d0]	1.20	-	EN 1993-1-8 – Table 3.3
Concrete breakout resistance check	Both		
Cracked concrete	Yes		EN 1992-4
Local deformation check	Yes		
Local deformation limit	0.03	-	CIDECT DG 1, 3 – 1.1
Geometrical nonlinearity (GMNA)	Yes		Analysis with large deformations for hollow section joints
Braced system	No		EN 1993-1-8 – 5.2.2.5

Engineering geological surveys



Universalaus sporto paskirties inžinierinių statinių (11.) komplekso Veiverių pl. 132, Kauno m., statybos projektas

Užsakovas

Kauno miesto savivaldybės administracija

Vykdytojas

UAB „Rapasta“

Užsakovas	Kauno miesto savivaldybės administracija
Žemės gelmių registro Nr.	**-2024**
Objektas	Universalus sporto paskirties inžinerinių statinių kompleksas
Darbų rūšis	Projektiniai II geotechninės kategorijos inžineriniai geologiniai ir geotechniniai tyrimai
Dokumento tipas	**Ataskaita**
Objekto vieta	Veiverių g. 132, Kaunas

Įmonė	Pareigos	Vardas, pavardė	Parašas
UAB „Rapasta“	Direktorius	Vytautas Gumauskas	
	Vyr. Inžinierius-geologas	Saulius Tamulaitis	
	Inžinierius-geologas	Evaldas Belozaras	

Kvalifikacija	Leidimas tirti žemės gelmes Nr. 30	Kaunas 2024

TURINYS

I. Aiškinamasis raštas

1. Įvadas
2. Bendrieji duomenys apie statybos sklypą
3. Geologinė sandara
4. Hidrogeologinės sąlygos
5. Gruntų sudėtis ir inžineriniai geologiniai sluoksniai
6. Gruntų fizikinės – mechaninės savybės
7. Geologiniai procesai ir reiškiniai
8. Išvados ir rekomendacijos

II. Tekstiniai priedai:

1. Gruntų rodiklių vidurkinių verčių suvestinė lentelė (1 lapas)
2. Gruntų fizikinių savybių laboratorinių tyrimų rezultatai (1 lapas)
3. Gruntų kumuliatyvinės kreivės (2 lapai)
4. Vandens bendrosios cheminės analizės rezultatai, protokolas (1 lapas)
5. Gręžinių koordinačių ir altitudžių žiniaraštis (1 lapas)
6. Techninė užduotis inžineriniams geologiniams tyrinėjimams (2 lapai)
7. Tiriamojo objekto dislokacijos schema (1 lapas)
8. Tenzozondo kalibravimo liudijimas (2 lapai)
9. Leidimas tirti žemės gelmes Nr. 30 (1 lapas)

III. Grafiniai priedai:

1. Gręžinių Nr. 1-19 stulpeliai su statinio zondavimo (CPT) grafikais (18 lapų)
2. Inžineriniai geologiniai pjūviai I-I - X-X (Mv 1: 100, Mh 1 :1000) su sutartiniais ženklais (6 lapai)
3. Topografinis sklypo planas M 1:1000 su statinio zondavimo bandymų (CPT), gręžinių ir inžinerinių geologinių pjūvių vietomis (1 lapas)

I. AIŠKINAMASIS RAŠTAS

1. Įvadas

UAB “Rapasta” (leidimas tirti žemės gelmes Nr. 30, išduotas 2003-02-21), vadovaujant direktoriui Vytautui Gumauskui, 2024 m. liepos mėn., pagal Kauno miesto savivaldybės administracijos užsakymą atliko projektinius inžinerinius geologinius ir geotechninius tyrimus adresu: Veiverių pl. 132, Kaunas.

Tyrimų paskirtis ir stadija – projektiniai inžineriniai geologiniai ir hidrogeologiniai tyrimai universalaus sporto paskirties inžinerinių statinių komplekso naujos statybos techninio projekto parengimui.

Statinio kategorija – ypatingasis statinys, statybos rūšis – nauja statyba, geotechninė kategorija – antra.

Informacija apie ankščiau tyrimų plote atliktus IGG tyrimus – duomenų nerasta.

Tyrimai atlikti pagal šių normatyvinių dokumentų reikalavimus:

1. STR 1.04.02:2011 „Inžineriniai geologiniai ir geotechniniai tyrimai“.
2. LST EN 1997 – 1 „Eurokodas 7. Geotechninis projektavimas. 1 dalis. Pagrindinės taisyklės.
3. LST EN 1997 – 2 „Eurokodas 7. Geotechninis projektavimas. 2 dalis. Pagrindo tyrinėjimai ir bandymai“.
4. LST EN ISO 14688 – 1 :2018 Geotechniniai tyrinėjimai ir bandymai. Gruntų atpažintis ir klasifikavimas. 1 dalis. Atpažintis ir aprašymas (ISO 14688-1:2017).
5. LST EN ISO 14688 – 2 :2018 Geotechniniai tyrinėjimai ir bandymai. Gruntų atpažintis ir klasifikavimas. 2 dalis. Klasifikavimo principai (ISO 14688-2:2017).
6. Lietuvos geologijos tarnybos prie Aplinkos ministerijos direktoriaus įsakymas Nr. 1-175 „Dėl inžinerinių geologinių ir geotechninių tyrimų gruntų klasifikacijos patvirtinimo“ (TAR 2019-06-14, Identifikacinis kodas 2019-09653).
7. Lietuvos geologijos tarnybos prie Aplinkos ministerijos direktoriaus įsakymas Nr. 1-222 „Dėl Projektinių inžinerinių geologinių ir geotechninių tyrimų rekomendacijų patvirtinimo“ (TAR 2015-11-16, Identifikacinis kodas 2015-18162).
8. LST EN ISO 22476 – 1:2012 Geotechniniai tyrinėjimai ir bandymai. Lauko bandymai. 1 dalis. Įspaudimo bandymas, naudojant elektroninį ir pjezoelektroninį kūgį.

Lauko darbų metu užsakovo nurodytose vietose remiantis LST EN 1997 – 2:2007 „Eurokodas 7. Geotechninis projektavimas. 2 dalis. „Pagrindo tyrinėjimai ir bandymai“: reikalavimais ir atsižvelgiant į projektuotojų pageidavimus, statybiniame sklype gruntų deformacinių savybių nustatymui atlikta 19 grunto statinio zondavimo (CPT) bandymų, kurių gylis siekė 6,0-12,4 m, kad būtų patikslintas gruntų stiprumas ir gautos gruntų deformacinių savybių vertės. Bendras projektinių IGG tyrimų metu atliktų CPT bandymų metražas – 201,2 m.

Bandymų vietos tirtame sklype nužymėtos GPS prietaisu ir linijiniais matavimais. Gręžinių žemės paviršiaus aukščiai parinkti iš topografinio plano. Aukščių sistema LAS07. Koordinačių sistema – LKS – 94.

Statinio zondavimo bandymai (CPT) atlikti savaeigiu įtalų firmos „PAGANI“ agregatu, zondo įspraudimo įranga TG 63-200, remiantis: „LST EN ISO 22476–1:2012 Geotechniniai tyrinėjimai ir bandymai. Lauko bandymai. 1 dalis. Įspaudimo bandymas, naudojant elektroninį ir pjezoelektroninį kūgį“. Zondavimo metu elektroniniu tenzozondu nustatytas grunto pasipriešinimo stiprumas zondavimo galvutei, t.y. kūginis stipris q_c ir matuota lokalinė šoninė trintis f_s.

Naudoto zondo techninės charakteristikos: zondo skersmuo 35,70 mm, kūgio pagrindo plotas 10 cm^2, kūgio smaigalio kampas 60°, trinties movos paviršiaus plotas 150 cm^2.

Pagal kūginį stiprumą qc buvo patikslintos ribos tarp inžinerinių geologinių sluoksnių ir paskaičiuoti deformacijų moduliai Eo pagal formulę Eo-K*qc, taikant projektinių 2015 m. projektinių inžinerinių geologinių ir geotechninių tyrimų rekomendacijų 6 priedą.

Prie statinio zondavimo (CPT) bandymo vietų, projektinių IGG tyrimų metu, agregatu „UGB-1VS“ buvo išgręžta 19 gręžinių, gręžinių gylis siekia 6,0 – 12,0 m gylio inžinerinių geologinių ir hidrogeologinių sąlygų nustatymui, ir kad būtų galima pritaikyti atitinkamus koreliacinius koeficientus deformacijos modulio paskaičiavimui, grunto bandinių laboratoriniams tyrimams paėmimui. Bendras išgręžtų gręžinių metražas – 204,0 m.

Gręžiant gręžinius iš gręžinių buvo imami suardytos ir nesuardytos struktūros grunto bandiniai. Laboratorinius grunto tyrimus atliko UAB „Rapasta“ geotechninė laboratorija. Tyrimų metu paimtas vienas požeminio vandens mėginys, vandens tyrimus atliko – UAB „Vandens tyrimai“ Laboratorija.

Gręžiant gręžinius (projektinių IGG tyrimų metu) iš gręžinių buvo paimta 11 suardytos struktūros grunto bandinių ir 2 nesuardytos struktūros grunto bandiniai. Iš gręžinio Nr. 13, paimtas požeminio vandens mėginys – vandens cheminės analizės nustatymui, bei požeminio vandens agresyvumo, normalaus tankio betonui, įvertinimui.

Lauko darbams vadovavo geologas A. Motūza, geologinę tyrimų ataskaitą paruošė inž. geologas E. Belozaras. Laboratorinius grunto tyrimus ir bandymus atliko laborantės R. Jonaitytė ir G. Kaselienė.

2. Bendrieji duomenys apie statybos sklypą

Tyrinėta teritorija yra Kauno mieste, greta S.Dariaus ir S.Girėno, bei Zapyškio gatvių. Gręžinių žemės paviršiaus aukščiai svyravo 73,45 – 74,20 m ribose (gręžinių zonoje, reljefo peraukštėjimas siekia apie 0,8 m). Tirtoje teritorijoje yra krūmais bei įvairia augalija apaugusių kūdrų, griovių, supiltų ar sustumdytų žemių sąvartų.

3. Geologinė sandara

Geomorfologiniu požiūriu tyrinėtas sklypas yra priskirtas paskutinio apledėjimo amžiui, Pabaltijo žemumų sričiai, Nemuno vidurupio plynaukštės rajonui, Garliavos limnoglacialinės lygumos mikrorajonui. Reljefas: glacialinis.

Litologija.

Geologiniu požiūriu geotechninį pjūvį sudaro technogeniniai dariniai (t IV), limnoglacialinės nuogulos (lg III bl) ir glacialinės nuogulos (g III bl).

Tyrimų plotas (gręžinių zonoje) padengtas 0,1 - 0,3 m storio dirvožemio sluoksniu. Po dirvožemiu, iki 0,4-2,0 m gylio stebėti technogeniniai dariniai, kuriuos sudaro neplaningai supiltas smėlingas ar molingas gruntas su dirvožemio (organinės medžiagos) priemaiša, retai su žvyro ar statybinio laužo, priemaiša, Mg (IGS Nr. 1). Po supiltu gruntu, iki 1,3 – 2,6 m gylio stebėtos limnoglacialinės nuogulos, kurias sudaro vidutinio stiprumo, rečiau stiprus Smėlingas mažo plastiškumo molis, saClL, rudas-margas (sluoksniuotas), su smėlio lęšiais (IGS Nr. 2, 3), giliau tyrimų plote slūgso glacialinės nuogulos, kurias sudaro vidutinio stiprumo ar stiprus Smėlingas mažo plastiškumo molis, moreninis, saClL, rudas-tamsiai rudas (IGS Nr. 4, 5). 6,0-12,0 m gylio gręžiniais, glacialinių nuogulų padas nepasiektas.

4. Hidrogeologinės sąlygos

Hidrogeologinės sąlygos pateiktos remiantis vandens lygio stebėjimais gręžiniuose tyrimų metu.

Tyrimų metu, gręžiniuose sutiktas podirvio vanduo. *Podirvio vanduo* sutiktas gręžinio Nr. 13 zonoje 1,3 m gylyje nuo žemės paviršiaus (abs. alt. 72,90 m). Podirvio vanduo susikaupęs supiltame grunte ir smėlingame mažo plastiškumo molyje esančiuose smėlio lęšiuose ar intarpuose. Kitur tyrimų metu, požeminis vanduo nesutiktas (atkreipiame dėmesį,

kad tyrimai buvo vykdyti sausuoju metų laikotarpiu, tikėtina, kad podirvio vanduo išgaravęs ar nusidrenavęs).

Lietingais metų laikotarpiais ir pavasarinių polaidžių metu, virš vandeniui mažai laidžių grunto sluoksnių (arti žemės paviršiaus, o reljefo pažemėjimuose ir virš jo), gali susikaupti podirvio vanduo, kuris sausuoju metų laikotarpiu gali išgaruoti ar nusidrenuoti.

Pagal paimto (iš gręžinio Nr. 13) požeminio vandens mėginio cheminės analizės rezultatus, pagal STR 2.05.05:2005, VI skyrių, 2 lentelę nustatyta, kad požeminis vanduo betoninėms ir gelžbetoninėms konstrukcijoms nėra agresyvus.

5. Gruntų sudėtis ir inžineriniai geologiniai sluoksniai

Inžinerinė geologinė sandara pateikta gręžinių stulpeliuose ir inžineriniuose geologiniuose pjūviuose. Inžinerinių geologinių sluoksnių aprašymas pateiktas „Gruntų rodiklių vidurkinių verčių suvestinėje lentelėje“.

Pagal gręžimo, statinio zondavimo (CPT) bandymų, laboratorinius duomenis tirtame sklype slūgsantys gruntai išskirti į 5 inžinerinius geologinius sluoksnius (IGS).

Gruntai identifikuoti pagal LST EN ISO 14688-1:2018 „Geotechniniai tyrinėjimai ir bandymai. Gruntų identifikavimas ir klasifikavimas. 1dalis. Identifikavimas ir aprašymas“. Gruntai klasifikuoti pagal Lietuvos geologijos tarnybos prie Aplinkos ministerijos direktoriaus įsakymą Nr. 1-175 „Dėl inžinerinių geologinių ir geotechninių tyrimų gruntų klasifikacijos patvirtinimo“ (2019 m. birželis). Taip pat gruntai identifikuojami pagal Lietuvos geologijos tarnybos prie Aplinkos ministerijos direktoriaus įsakymo Nr. 1-222 „Dėl projektinių inžinerinių geologinių ir geotechninių tyrimų rekomendacijų patvirtinimo“ rekomendacijas.

Tyrimų plotas (gręžinių zonoje) padengtas 0,1 - 0,3 m storio dirvožemio sluoksniu. Po dirvožemiu, iki 0,4-2,0 m gylio stebėtas neplaningai supiltas smėlingas ar molingas gruntas su dirvožemio priemaiša, retai su žvyro ar statybinio laužo, priemaiša, Mg (IGS Nr. 1). Po supiltu gruntu, iki 1,3 – 2,6 m gylio stebėtas vidutinio stiprumo, rečiau stiprus Smėlingas mažo plastiškumo molis, saClL, rudas-margas (sluoksniuotas), su smėlio lęšiais (IGS Nr. 2, 3), giliau tyrimų plote slūgso vidutinio stiprumo ar stiprus Smėlingas mažo plastiškumo molis, moreninis, saClL, rudas-tamsiai rudas (IGS Nr. 4, 5).

Inžinerinių geologinių sluoksnių geometrija, slūgsojimo gylis, storiai ir altitudės pateiktos inžineriniuose geologiniuose pjūviuose ir gręžinių stulpeliuose.

6. Gruntų fizikinės – mechaninės savybės

Gruntų fizikinių ir mechaninių savybių vidurkinės vertės kiekvienam inžineriniam geologiniui sluoksniui (IGS) pateiktos suvestinėje gruntų rodiklių lentelėje.

Fizikinės savybės pateikiamos „Gruntų fizikinių savybių laboratorinių tyrimų rezultatai“ lentelėse.

IGS – 1 priskiriamas Supiltas gruntas: smėlingas ar molingas gruntas su dirvožemio priemaiša, retai su žvyro ar statybinio laužo, priemaiša, Mg, kūginis stipris qc siekia 0,5-14,0 MPa, paskaičiuotas deformacijų modulis Eo siekia 0,5 MPa;

IGS – 2 priskiriamas Smėlingas mažo plastiškumo molis, saClL, rudas-margas (sluoksniuotas),su smėlio lęšiais, vidutinio stiprumo, kūginis stipris qc siekia 1,5-2,4 MPa, paskaičiuotas deformacijų modulis Eo siekia 12 MPa, nustatytas grunto kietųjų dalelių tankis ρs – 2,72 Mg/m3, nustatytas grunto gamtinis tankis ρ – 2,08 Mg/m3;

IGS – 3 priskiriamas Smėlingas mažo plastiškumo molis, saClL, rudas-margas (sluoksniuotas), su smėlio lęšiais, stiprus, kūginis stipris qc siekia 2,6-2,7 MPa, paskaičiuotas deformacijų modulis Eo siekia 18 MPa, nustatytas grunto kietųjų dalelių tankis ρs – 2,73 Mg/m3;

IGS – 4 priskiriamas Smėlingas mažo plastiškumo molis, moreninis, saClL, rudas-tamsiai rudas, vidutinio stiprumo, kūginis stipris qc siekia 2,0-2,3 MPa, paskaičiuotas deformacijų modulis Eo siekia 21 MPa, nustatytas grunto kietųjų dalelių tankis ρs – 2,73 Mg/m3;

IGS – 5 priskiriamas Smėlingas mažo plastiškumo molis, moreninis, saClL, rudas-tamsiai rudas, stiprus, kūginis stipris qc siekia 2,5-4,0 MPa, paskaičiuotas deformacijų modulis Eo siekia 29 MPa, nustatytas grunto kietųjų dalelių tankis ρs – 2,71-2,72 Mg/m3, nustatytas grunto gamtinis tankis ρ – 2,18 Mg/m3;

Deformacijų modulis (visuminės deformacijos modulis – E_0, MPa) apskaičiuotas pagal projektinių inžinerinių geologinių ir geotechninių tyrimų rekomendacijas.

$E_0 = 1,0*qc$ (IGS – 1);

$E_0 = 7,0*qc$ (IGS –2, 3);

$E_0 = 10,0*qc$ (IGS – 4);

$E_0 = 12*qc^{0,81}$ (IGS – 5).

čia: E_0 - grunto deformacijų modulis, MPa

qc - grunto kūginis stipris.

Grunto gamtinis tankis ρ, kietų dalelių tankis ρs, takumo rodiklis IL, pateikti pagal laboratorinių tyrimų rezultatus.

Gauti rezultatai pateikti suvestinėje gruntų rodiklių lentelėje (tekst. priedas Nr.1).

Gruntų fizikinių ir mechaninių savybių nustatymui (IGG tyrimų metu) buvo paimta 2 nesuardytos struktūros grunto bandiniai ir 11 suardytos struktūros grunto bandinių.

Laboratorijoje atlikti tyrimai ir bandymai:

Fizikinės gruntų savybės:

a) Granuliometrinės sudėties nustatymas. LST CEN ISO/TS 17892-4:2017;

b) Gamtinis tankis (ρ). LST CEN ISO/TS 17892-2:2015;

c) Atenbergo ribų nustatymas (plastingumo ir takumo ribos) LST CEN ISO/TS 17892-12:2018;

d) Gamtinio drėgnio nustatymas LST EN ISO 17892-1:2015;

e) Kietųjų dalelių tankis (ρs). LST EN ISO 17892-3:2016;

Atlikta 1 požeminio vandens cheminės analizės tyrimas.

Laboratorinių bandymų protokolai pateikti tekstiniuose prieduose Nr. 2-4.

Gruntų vidurkiniai rodikliai pateikti suvestinėse lentelėje. *Skaičiavimams rekomenduojami gruntų rodikliai taikytini su sąlyga, jeigu statybos metu pagrindo gruntai bus apsaugoti nuo esamos sandaros suardymo, išmirkimo, išdžiūvimo ar sušaldymo.*

7. Geologiniai procesai ir reiškiniai

Tyrinėtoje teritorijoje vyksta kriogeniniai procesai, žmogaus ūkinė veikla, Pagal karsto – sufozijos kategorijos pavojingumą, teritorija priskiriama nepavojingai.

8. Išvados ir rekomendacijos

1. Geomorfologiniu požiūriu tyrinėtas sklypas yra priskirtas paskutinio apledėjimo amžiui, Pabaltijo žemumų sričiai, Nemuno vidurupio plynaukštės rajonui, Garliavos limnoglacialinės lygumos mikrorajonui. Reljefas: glacialinis. Geologiniu požiūriu geotechninį pjūvį sudaro technogeniniai dariniai (t IV), limnoglacialiniai dariniai (lg III bl) ir glacialinės nuogulos (g III bl).

2. Tyrinėta teritorija yra Kauno mieste, greta S. Dariaus ir S. Girėno, bei Zapyškio gatvių. Gręžinių žemės paviršiaus aukščiai svyravo 73,45 – 74,20 m ribose (gręžinių zonoje, reljefo peraukštėjimas siekia apie 0,8 m). Tirtoje teritorijoje yra krūmais bei įvairia augalija apaugusių kūdrų, griovių, supiltų ar sustumdytų žemių sąvartų.

3. Pagal gręžimo, statinio zondavimo bandymų (CPT), laboratorinius duomenis tirtame sklype slūgsantys gruntai išskirti į 5 inžinerinius geologinius sluoksnius (IGS).

4. Hidrogeologinės sąlygos pateiktos remiantis vandens lygio stebėjimais gręžiniuose tyrimų metu. Tyrimų metu, gręžiniuose sutiktas podirvio vanduo. Podirvio vanduo sutiktas gręžinio Nr. 13 zonoje 1,3 m gylyje nuo žemės paviršiaus (abs. alt. 72,90 m). Podirvio vanduo susikaupęs supiltame grunte ir smėlingame mažo plastiškumo molyje esančiuose smėlio lęšiuose ar intarpuose. Kitur tyrimų metu, požeminis vanduo nesutiktas (atkreipiame dėmesį, kad tyrimai buvo vykdyti sausuoju metų laikotarpiu, tikėtina, kad podirvio vanduo išgaravęs

ar nusidrenavęs). Lietingais metų laikotarpiais ir pavasarinių polaidžių metu, virš vandeniui mažai laidžių grunto sluoksnių (arti žemės paviršiaus, o reljefo pažemėjimuose ir virš jo), gali susikaupti podirvio vanduo, kuris sausuoju metų laikotarpiu gali išgaruoti ar nusidrenuoti.

Pagal paimto (iš gręžinio Nr. 13) požeminio vandens mėginio cheminės analizės rezultatus, pagal STR 2.05.05:2005, VI skyrių, 2 lentelę nustatyta, kad požeminis vanduo betoninėms ir gelžbetoninėms konstrukcijoms nėra agresyvus.

5. Tyrimų plote iki 0,4-2,0 m gylio stebėtas neplaningai supiltas gruntas, tai smėlingas ar molingas gruntas su dirvožemio (organinės medžiagos) priemaiša, retai su žvyro ar statybinio laužo, priemaiša, Mg (IGS Nr. 1), šio sluoksnio nerekomenduojame naudoti pamatų pagrindams (atkreipiame dėmesį, kad esamų inžinerinių tinklų ar buvusių iškasų zonoje, technogeninių darinių storis gali būti ir didesnis).

6. Jei bus kasamos iškasos ar gręžiamos gręžduobes giliau požeminio vandens lygio, vyks grunto slinkimas ir vandens pritekėjimas į iškasas ar gręžduobes.

7. Jei bus įrenginėjamos požeminės patalpos, apsaugai nuo podirvio vandens, rekomenduojame įrengti drenažą.

8. Tyrimų plote galimi įvairaus tipo pamatai, pamatų įrengimą gali apsunkinti požeminis vanduo, moreniniame smėlingame mažo plastiškumo molyje pasitaikantis žvirgždas ar gargždas, lietingais metų laikotarpiais ir pavasarinių polaidžių metu, įmirkęs gruntas apsunkins technikos judėjimą.

9. Pamatus projektuoti pagal ataskaitoje pateiktas geologines bei hidrogeologines sąlygas, pagal nustatytas gruntų fizikines-mechanines charakteristikas.

Parengė: inž. geologas E. Belozaras

GRUNTŲ RODIKLIŲ VIDURKINIŲ VERČIŲ SUVESTINĖ LENTELĖ

Geologinis indeksas	Inž. geologinio sluoksnio Nr. (IGS)	***Grunto aprašymas*** pagal LST EN ISO 14688-1:2018 ir LGT direktoriaus įsakymą Nr. 1-175 (2019 m)	Nedrenuotas grunto stipris cu' kPa	Vidurkinės vertės: Grunto tankis ρ' Mg/m3	Sankiba c, kPa	Vidinės trinties kampas φ'	Deformacijų modulis E_{oed} MPa (prie 200 kPa)	Deformacijų modulis E_0 MPa	Dalelių tankis ρs Mg/m3	kūginis stiprumas qc MPa	Poringumo koeficientas, e	Žymėjimas
1	2	3	4	5	6	7	8	9	10	11	12	13
t IV	1	Supiltas gruntas: smėlingas ar molingas gruntas su dirvožemio priemaiša, retai su žvyro ar statybinio laužo, priemaiša, Mg	—	—	—	—	—	0,5*	—	0,5* / 0,5-14,0	—	
lg III bl	2	Smėlingas mažo plastiškumo molis, saClL, rudas-margas (sluoksniuotas),su smėlio lęšiais, vidutinio stiprumo	—	2,08+	—	—	—	12*	2,72+	1,8* / 1,5-2,4	—	
	3	Smėlingas mažo plastiškumo molis, saClL, rudas-margas (sluoksniuotas),su smėlio lęšiais, stiprus	—	—	—	—	—	18*	2,73+	2,6* / 2,6-2,7	—	
g III bl	4	Smėlingas mažo plastiškumo molis, moreninis, saClL, rudas-tamsiai rudas, vidutinio stiprumo	—	—	—	—	—	21*	2,73+	2,1* / 2,0-2,3	—	
	5	Smėlingas mažo plastiškumo molis, moreninis, saClL, rudas-tamsiai rudas, stiprus	—	2,18+	—	—	—	29*	2,72+ / 2,71-2,72	3,0* / 2,5-4,0	—	

Pastaba: Gruntų rodiklių vertės pateiktos :

a- * pagal statinio zondavimo stiprumą kūgiui qc (smėliui vidinės trinties kampas f ir deformacijų modulis E_0 pagal projektinių inžinerinių geologinių ir geotechninių tyrimų rekomendacijas (7 ir 6 priedai))

b- + pagal laboratorinius tyrimus

c- gruntų deformacijų modulis paskaičiuotas pagal formulę:

E = 1,0*qc (IGS - 1);
E = 7,0*qc (IGS - 2, 3);
E = 10,0*qc (IGS - 4);
$E = 12,0*qc^{0.81}$ (IGS - 5).

d) lentelės skiltyje Nr.3 gruntų pavadinimas ir žymuo pateiktas pagal LST EN ISO 14688-1:2018 ir LGT direktoriaus įsakymas Nr. 1-175 (2019 m. birželis).

Gruntai suskirstyti pagal stiprumą remiantis projektinių inžinerinių geologinių ir geotechninių tyrimų rekomendacijų 5 priedu:

Smulkūs gruntai: (moliai ir dulkiai)
qc: <0,50 MPa, labai silpni
qc: 0,50 - 1,00 MPa, silpni
qc: 1,00 - 2,50 MPa, vidutinio stiprumo
qc: 2,50 - 4,00 MPa, stiprūs
qc: >4,00 MPa, labai stiprūs

Rupūs gruntai (smėliai, žvyrai)
qc: 0,00 -2,50 MPa,labai purūs (labai silpni)
qc: 2,50 - 5,00 MPa, purūs (silpni)
qc: 5,00 - 10,00 MPa, vidutinio tankumo (vidutinio stiprumo)
qc: 10,00 - 20,00 MPa, tankūs (stiprūs)
qc: >20,00 MPa, labai tankūs (labai stiprūs)

Sutartiniai ženklai

5.9 * / 5.2 - 6.6 — Vidutinė reikšmė / minimalios - maksimalios reikšmės

Smėlio ar dulkio lęšiai

organinės medžiagos priemaiša

Rapasta	LGT leidimo Nr. 30 Gedimino g. 47-217 LT - 44242, Kaunas info@rapasta.lt	OBJEKTAS : Universalaus sporto paskirties inžinierinių statinių (11.) komplekso Veiverių pl. 132, Kauno m., statybos projektas
PAREIGOS	PAVARDĖ	PARAŠAS
Lauko darbų geologas	A. Motūza	
Brėžinį paruošė inž. geologas	E. Belozaras	
	Data 2024 07	BRĖŽINYS : Gruntų rodiklių vidurkinių verčių suvestinė lentelė

Rapasta
Geotechninė laboratorija

Gruntų fizikinių savybių laboratorinių tyrimų rezultatai

Objektas: **Universalaus sporto paskirties inžinierinių statinių (11.) komplekso Veiverių pl. 132, Kauno m., statybos projektas**

2024 07 16

Band. Nr.	Grėž. Nr.	Bandinio paėmimo gylis, m	Granuliometrinė sudėtis										Dalelių tankis Mg/m3	Grunto tankis Mg/m3		Gamtinis drėgnis W,%	Aterbergo ribos			Takumo rodiklis IL(1 dalimi)	Organinės medžiagos kiekis	Grunto pavadinimas (EN ISO 14688 -1:2018 ir LGT dir. Įsakymas Nr. 1-175 (2019 -birželis)
			žvyras			smėlis			dulkės			molis		gamtinis	sauso		takumo drėgnis WL, %	plasting. drėgnis Wp %	plasting. rodiklisIp, %			
			63-20	20-6,3	6,3-2	2-0,63	0,63-0,2	0,2-0,063	0,063-0,02	0,02-0,0063	0,0063-0,002	<0,002										
1	2	3	4	5	6	7	8	9	10	11	12	13	14	15	16	17	18	19	20	21	22	23
pagal LST EN ISO 17892-4-2017														17892-2-2015			17892-12-2018					
1	2	1,8-2,0	0.0	0.9	2.2	3.5	11.0	25.5	17.6	14.5	14.1	10.7	2.73			14.8	31.0	14.7	16.3	0.01		Smėlingas mažo plastiškumo molis
			3.1			40.0			46.2			10.7										saCIL
2	3	4,3-4,5	0.0	2.3	2.2	2.7	5.9	20.2	17.6	15.0	15.5	18.6	2.71			14.4	29.8	16.0	13.8	-0.12		Smėlingas mažo plastiškumo molis
			4.5			28.8			48.1			18.6										saCIL
3	3	7,2-7,4	0.0	0.7	2.1	2.8	6.7	22.6	18.0	13.9	16.3	16.9	2.72	2.18	1.88	15.5	30.5	14.9	15.6	0.04		Smėlingas mažo plastiškumo molis
			2.8			32.1			48.2			16.9										saCIL
4	4	4,8-5,0														14.9	31.0	15.8	15.2	-0.06		
			0.0			0.0			0.0			0.0										
5	5	5,0-5,2														15.9	31.3	15.8	15.5	0.01		
			0.0			0.0			0.0			0.0										
6	6	5,4-5,6														15.3	30.4	15.0	15.4	0.02		
			0.0			0.0			0.0			0.0										
7	9	7,0-7,2	0.0	2.0	2.9	3.0	6.9	24.6	18.1	14.3	14.6	13.6	2.73			14.5	27.8	13.1	14.7	0.10		Smėlingas mažo plastiškumo molis
			4.9			34.5			47.0			13.6										saCIL
8	12	1,2-1,4														15.2	33.6	17.3	16.3	-0.13		
			0.0			0.0			0.0			0.0										
9	13	2,2-2,4	0.0	1.1	1.1	2.5	4.1	20.9	18.7	14.5	24.0	13.1	2.72	2.08	1.74	19.8	29.4	16.0	13.4	0.28		Smėlingas mažo plastiškumo molis
			2.2			27.5			57.2			13.1										saCIL
10	14	4,4-4,6														16.0	30.5	14.3	16.2	0.10		
			0.0			0.0			0.0			0.0										
11	16	2,4-2,6	0.0	2.6	2.8	3.3	6.6	24.3	17.9	15.1	14.9	12.5	2.72			13.6	28.2	14.9	13.3	-0.10		Smėlingas mažo plastiškumo molis
			5.4			34.2			47.9			12.5										saCIL
12	18	2,8-3,0														14.2	28.0	13.5	14.5	0.05		
			0.0			0.0			0.0			0.0										
13	19	4,8-5,0														13.6	31.8	13.9	17.9	-0.02		
			0.0			0.0			0.0			0.0										

Gruntų tyrimus atliko: R. Jonaitytė, G. Kaselienė

Rapasta

Grain size distribution data of soils / Gruntų kumuliatyvinės kreivės

Objektas: Universalaus sporto paskirties inžinierinių statinių (11.) komplekso Veiverių pl. 132, Kauno m., statybos projektas

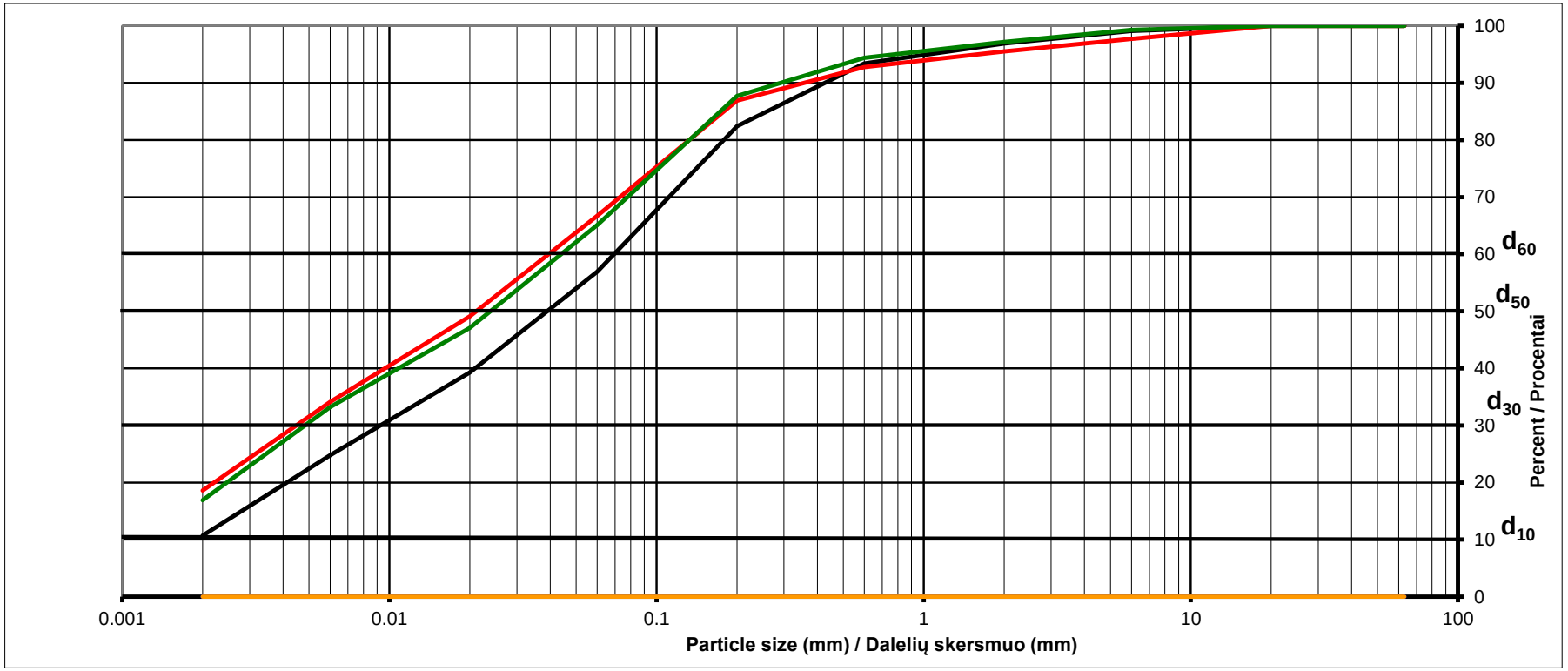

Sample No. / Bandinio Nr.	Borehole No. / Gręžinio Nr.	Sample pickup depth, m / Bandinio gylis (m)	Curves color / Kreivės spalva	d_{10}	d_{30}	d_{50}	d_{60}	C_u	C_c	Soil / Gruntas
1	**2**	**1,8-2,0**	**black / juoda**	0.0019	0.0092	0.0390	0.0695	36.7	0.6	saClL
2	**3**	**4,3-4,5**	**red / raudona**	0.0011	0.0045	0.0640	0.0395	36.3	0.5	saClL
3	**3**	**7,2-7,4**	**green / žalia**	0.0013	0.0048	0.0239	0.0440	35.0	0.4	saClL

Geologist / Geologas: E. Belozaras

Rapasta

Grain size distribution data of soils / Gruntų kumuliatyvinės kreivės

Objektas: Universalaus sporto paskirties inžinierinių statinių (11.) komplekso Veiverių pl. 132, Kauno m., statybos projektas

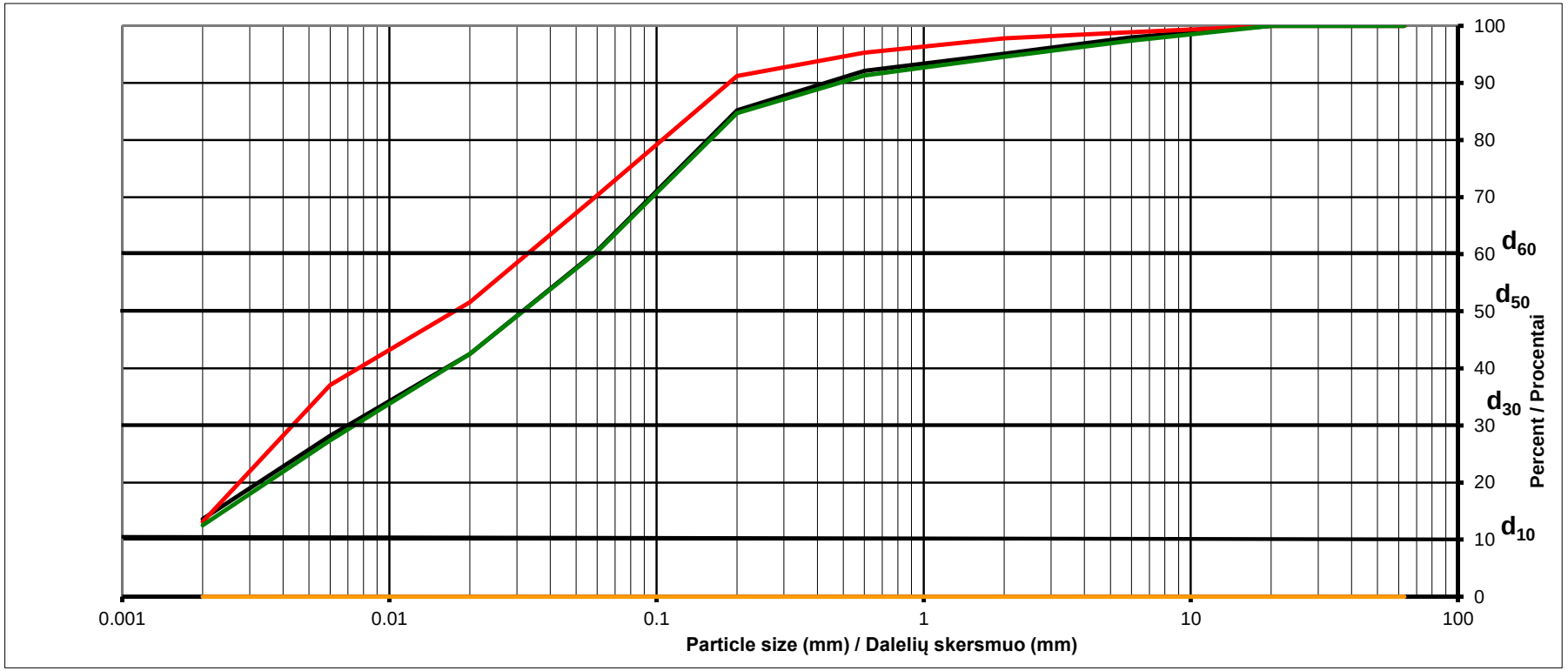

Sample No. / Bandinio Nr.	Borehole No. / Gręžinio Nr.	Sample pickup depth, m / Bandinio gylis (m)	Curves color / Kreivės spalva	d_{10}	d_{30}	d_{50}	d_{60}	C_u	C_c	Soil / Gruntas
7	**9**	**7,0-7,2**	**black / juoda**	0.0015	0.0070	0.0315	0.0579	37.9	0.6	saClL
9	**13**	**2,2-2,4**	**red / raudona**	0.0017	0.0043	0.0640	0.0328	18.9	0.3	saClL
11	**16**	**2,4-2,6**	**green / žalia**	0.0017	0.0074	0.0317	0.0585	35.2	0.6	saClL

Geologist / Geologas: E. Belozaras

Rapasta Koordinačių ir altitudžių

ŽINIARAŠTIS

Objekto pavadinimas: Universalaus sporto paskirties inžinierinių statinių (11.) komplekso Veiverių pl. 132, Kauno m., statybos projektas

Gręžinius nužymėjo: geologas A. Motūza

Koordinačių sistema: LKS-94 Aukščių sistema: LAS07

Planinio pririšimo būdas: GPS prietaisas ir linijinis matavimas nuo esamų kontūrų

Koordinačių nustatymo metodas: iš plano

Altitudžių nustatymo metodas: parinkta iš topografinio plano

Eil. nr.	Bandymo nr .	Koordinatės		Altitudė	Planšeto nomenklatūra	Pastabos
		x	y			
1	Gr. CPT - 1	6083575.13	492634.11	73.45		
2	Gr. CPT - 2	6083517.67	492597.68	73.57		
3	Gr. CPT - 3	6083596.75	492673.85	73.55		
4	Gr. CPT - 4	6083575.39	492669.66	73.52		
5	Gr. CPT - 5	6083539.59	492655.6	73.65		
6	Gr. CPT - 6	6083502.40	492646.34	73.70		
7	Gr. CPT - 7	6083566.44	492725.59	73.60		
8	Gr. CPT - 8	6083521.34	492712.76	73.90		
9	Gr. CPT - 9	6083560.25	492788.17	73.98		
10	Gr. CPT - 10	6083539.26	492782.01	73.92		
11	Gr. CPT - 11	6083502.78	492770.87	74.20		
12	Gr. CPT - 12	6083466.32	492758.63	73.95		
13	Gr. CPT - 13	6083468.28	492801.58	74.20		
14	Gr. CPT - 14	6083521.41	492807.26	73.75		
15	Gr. CPT - 15	6083565.40	492816.74	73.55		
16	Gr. CPT - 16	6083482.62	492835.92	73.75		
17	Gr. CPT - 17	6083449.69	492879.67	74.35		
18	Gr. CPT - 18	6083503.45	492862.25	74.05		
19	Gr. CPT - 19	6083550.41	492876.79	73.65		

Sudarė inž. geologas E. Belozaras

Statybos techninio reglamento STR 1.04.02:2011
„Inžineriniai geologiniai (geotechniniai) tyrimai“
2 priedas

(Techninės užduoties forma)

.....UAB „Conceptus group“.....
Dokumento sudarytojo pavadinimas
(*fizinio asmens vardas ir pavardė ar juridinio asmens pavadinimas*)

TECHNINĖ UŽDUOTIS

.....2024-06-27..... .....
Dokumento data Dokumento registracijos numeris

IGG tyrimų stadija (pabraukti): žvalgybiniai, projektiniai, papildomi , kontroliniai.
Tyrimų objekto pavadinimas: Universalaus sporto paskirties inžinierinių statinių (11.) komplekso Veiverių pl. 132, Kauno m., statybos projektas
... .
Tyrimų objekto adresas (savivaldybė, seniūnija, gyvenvietė, gatvė, statinio numeris): Veiverių pl. 132, Kaunas .....
... .
Užsakovo duomenys (pavadinimas (v. pavardė), adresas, telefono ryšio Nr., el. pašto adresas, jei fizinis asmuo asmens kodas): Kauno miesto savivaldybės administracija, Laisvės al. 96, 44251 Kaunas, +370422631, info@kaunas.lt,.....
Projektuotojo duomenys (pavadinimas (v. pavardė), adresas, telefono ryšio Nr., el. pašto adresas) UAB „Conceptus group“, Giedraičių g. 39, R53, 09302 Vilnius, +37060662068, info@conceptus.lt.....
Statybos rūšis (pabraukti): nauja statyba, rekonstrukcija, kapitalinis remontas, kita
Statinio paskirtis: sporto paskirties inžineriniai statiniai, kitos paskirties inžineriniai statiniai.
Statinio kategorija (pabraukti): ypatingasis, neypatingasis, nesudėtingasis
Nekilnojamųjų kultūros vertybių registro kodas (jei yra): .....
Geotechninė kategorija (projektiniuose tyrimuose) (pabraukti): pirma, antra, trečia.
Duomenys apie statinio parametrus (ilgis, plotis, aukštis, gylis, plotas): nėra
Perduodamos į pagrindą apkrovos ir jų intensyvumas Nenustatyti.....

Tyrimų ploto ribų koordinatės:

Numeris	**X**	**Y**
1	6083631,56	492633,81
2	6083549,65	492885,42
3	6083417,48	492911,27
4	6083517,66	492597,68

Papildomai nustatomi geotechniniai parametrai ir kiti reikalavimai:
1. .....

2. .....
3. .....
.....

Sąrašas normatyvinių dokumentų, kuriais vadovaujantis atliekami tyrimai:
1. STR 1.04.02:2011 „Inžineriniai geologiniai ir geotechniniai tyrimai“.
2. ST EN ISO 14688-1:2018. Geotechniniai tyrinėjimai ir bandymai. Gruntų atpažinimas ir klasifikavimas. 1 dalis. Atpažinimas ir aprašymas (ISO 14688-1:2017).
3. LST EN ISO 14688-2:2018. Geotechniniai tyrinėjimai ir bandymai. Gruntų atpažinimas ir klasifikavimas. 2 dalis. Klasifikavimo principai (ISO 14688-2:2017).
4. LGT prie AM įsakymas "Dėl Inžinerinių geologinių ir geotechninių tyrimų gruntų klasifikacijos patvirtinimo" (TAR 2019-06-14, Identifikacinis kodas 2019-09653).
5. LGT prie AM įsakymas "Dėl Projektinių inžinerinių geologinių ir geotechninių tyrimų rekomendacijų patvirtinimo" (TAR 2015-11-16, Identifikacinis kodas 2015-18162).
6. LST EN 1997-2 "Eurokodas 7. Geotechninis projektavimas. 2 dalis. Pagrindo tyrinėjimai ir bandymai".

Anksčiau sklype atlikti geologiniai tyrimai:
1. Anksčiau atliktų inžinerinių geologinių - geotechninių tyrinėjimų nerasta .....
2. .....
3. .....

Užsakovas Įgaliotas asmuo Aurimas Dališanskis, 2024-06-27 .....
vardas, pavardė, parašas, data

Projekto vadovas Aurimas Dališanskis, 2024-06-27 .....
vardas, pavardė, parašas, data

Direktorius
Vytautas Gumauskas

Tyrimų vadovas (užduotį gavau).....
vardas, pavardė, parašas, data

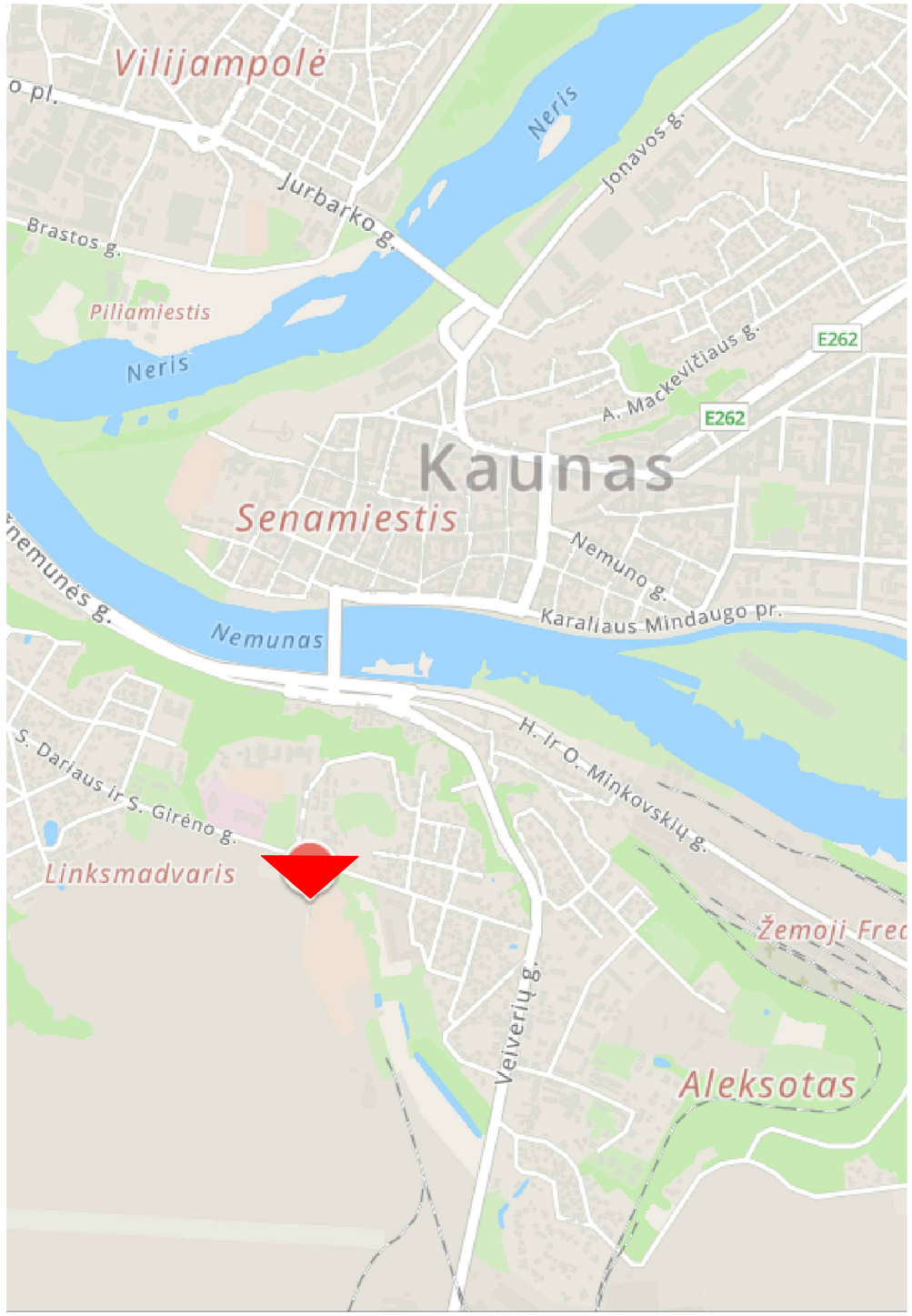



Sutartiniai ženklai:

— Tirto objekto vieta

Rapasta	LGT leidimo Nr. 30 Gedimino g. 47-217 LT - 44242, Kaunas info@rapasta.lt	OBJEKTAS : Universalaus sporto paskirties inžinierinių statinių (11.) komplekso Veiverių pl. 132, Kauno m., statybos projektas
PAREIGOS	PAVARDĖ	PARAŠAS
Lauko darbų geologas	A. Motūza	
Brėžinį paruošė inž. geologas	E. Belozaras	
	Data 2024 05	BRĖŽINYS : Tirto objekto dislokacijos schema

KALIBRAVIMO LIUDIJIMAS Nr. K-0003510

Užsakovas	Į.k. 134839070 UAB Rapasta Gedimino g. 47-217, LT-51331 Kaunas
Kalibruotas objektas	Tenzozondas CPT Nr. GL 0462 Kūgio spaudimo jėgos matavimo ribos: (0...100) kN (plotas 10 cm²; 100 kN atitinka 100 MPa) Šoninės trinties jėgos matavimo ribos: (0...15) kN (plotas 150 cm²; 15kN atitinka 1 Mpa) Indikatorius GRL 1503
Objekto būklė	MP neturi mechaninių ar kitokių pažeidimų
Kalibravimo metodas	Kalibravimo procedūra J2-02 (2018-12-13), 1 leidimas
Kalibravimą atliko	UAB "Nordic Metrology Science"Jungtinė laboratorija.Vilniaus regiono laboratorija, Dariaus ir Girėno g. 38, LT-02189, Vilnius
Kalibravimo atlikimo vieta	Ganyklų g. 15, Tauragė
Aplinkos sąlygos	Aplinkos temperatūra 20,5 ± 1 °C
Kalibravimo data	2023-10-24
Sietis	Matavimai buvo atlikti su šiais, kalibravimo būdu susietais etalonais: Etaloninis dinamometras susidedantis iš MGS plus, ML38B Nr. 801229358; Z4A/50 kN Nr.184930037; C18/500 kN Nr.002874TY
Kalibravimo liudijimo išdavimo data	2023-10-24
Inžinierius metrologas	Tautvydas Miliūnas
Vyresnysis inžinierius metrologas	Arūnas Brazinskas

Dokumentą elektroniniu parašu pasirašė TAUTVYDAS,MILIŪNAS
Data: 2023-10-26 11:17:22

Dokumentą elektroniniu parašu pasirašė ARŪNAS,BRAZINSKAS
Data: 2023-10-26 20:52:55

KALIBRAVIMO LIUDIJIMAS Nr. K-0003510
KALIBRAVIMO REZULTATAI

Tenzozondas CPT Nr. GL 0462

Apkrovos vardinė vertė (P),	Tenzozondo rodmenų vidurkis, (F_R)	Paklaida (ΔF),		Išplėstinė neapibrėžtis, (±U)	
kN	kN	kN	%	kN	%
Šoninė trintis					
0,6	0,600	0,000	0,00	± 0,006	± 0,96
1,5	1,510	0,010	0,67	± 0,006	± 0,39
3	3,017	0,017	0,56	± 0,029	± 0,98
6	6,027	0,027	0,44	± 0,029	± 0,49
15	15,02	0,02	0,16	± 0,03	± 0,20
Kūgis					
0,5	0,50	0,00	0,00	± 0,01	± 1,15
5	5,02	0,02	0,33	± 0,03	± 0,59
10	10,03	0,03	0,33	± 0,03	± 0,29
20	20,04	0,04	0,22	± 0,03	± 0,15
30	30,05	0,05	0,17	± 0,01	± 0,02
40	40,05	0,05	0,12	± 0,01	± 0,02
50	50,04	0,04	0,07	± 0,03	± 0,06
70	69,55	-0,45	-0,64	± 0,20	± 0,28

Prieš kalibravimą matavimo priemonė buvo apkrauta Max apkrova

Išmatuota jėga (F) lygi rodmens (F_R) ir paklaidos (ΔF) skirtumui su išplėstine neapibrėžtimi (± U)

$$F = (F_R - \Delta F) \pm U$$

Nurodytos vertės taikomos kalibruojamo objekto būklei kalibravimo metu

Išplėstinė neapibrėžtis apskaičiuota suminę standartinę neapibrėžtį padauginus iš koeficiento k=2, kuris, esant normaliniam skirstiniui, atitinka 95% pasikliautinumo lygmenį. Standartinė neapibrėžtis paskaičiuota pagal EA-4/02M.

Kalibravimo rezultatai susiję tik su kalibruojamu objektu.

Inžinierius metrologas Tautvydas Miliūnas

Kalibravimo liudijimas gali būti dauginamas tik pilnai. Atskiras kalibravimo liudijimo dalis galima dauginti tik gavus raštišką kalibravimo laboratorijos leidimą.

Lietuvos geologijos tarnybos prie
Aplinkos ministerijos direktoriaus
2011 m. birželio 14 d. įsakymo Nr. 1-109
priedas

LIETUVOS GEOLOGIJOS TARNYBA
PRIE LIETUVOS RESPUBLIKOS APLINKOS MINISTERIJOS

L E I D I M A S

TIRTI ŽEMĖS GELMES

2003-02-21 Nr. 30
(data)

Vadovaujantis Lietuvos Respublikos žemės gelmių įstatymu, **l e i d ž i a m a :**

Uždarajai akcinei bendrovei „Rapasta“
(juridinio asmens pavadinimas/fizinio asmens vardas pavardė)
(kodas (taikoma juridiniams asmenims) 134839070, buveinė (adresas)
Donelaičio g. 60, LT-44248 Kaunas

nuo 2003-02-26
(leidimo įsigaliojimo data)
a t l i k t i :

geologinį žemės gelmių kartografavimą;
hidrogeologinį žemės gelmių kartografavimą;
ekogeologinį žemės gelmių kartografavimą;
inžinerinį geologinį žemės gelmių kartografavimą;
inžinerinį geologinį (geotechninį) tyrimą;
ekogeologinį tyrimą;
mechaninį tyrimo, eksploatacijos (išskyrus angliavandenilių) ir kitos paskirties gręžinių gręžimą bei likvidavimą.

Direktoriaus pavaduotojas,
pavaduojantis direktorių _____ Jonas Satkūnas
(parašas) (vardas ir pavardė)

A.V.

Gr. Nr. 1

Data: 2024.07.04 Altitude : 73.45 m

Inž. geologinio sluoksnio Nr.	Grunto aprašymas pagal LST EN ISO 14688-1:2018 ir LGT direktoriaus įsakymą Nr. 1-175 (2019 m)	Sluoksnio gylis	Altitude	Sluoksnio storis	Stulpelis	Vandens lygis: Pasirodo	Vandens lygis: Nusist.	Vandens lygis: Maks.	Pagal CPT duomenis: qc (MPa)	Pagal CPT duomenis: Eo (MPa)	Pagal CPT duomenis: Vidaus tr. laipsnialis
	Dirvožemis	0.2	73.25	0.2				0.20 73.25	-	-	-
1	Supiltas gruntas: smėlingas gruntas su dirvožemiu, Mg	0.7	72.75	0.5					2.8	2.8	–
2	Smėlingas mažo plastiškumo molis, saClL, rudas-margas (sluoksniuotas),su smėlio lęšiais, vidutinio stiprumo	1.3	72.15	0.6					2.4	16	–
5	Smėlingas mažo plastiškumo molis, moreninis, saClL, rudas-tamsiai rudas, stiprus	5.3	68.15	4.0		Nesutiktas			3.6	33	–
									2.6	25	–
4	Smėlingas mažo plastiškumo molis, moreninis, saClL, rudas-tamsiai rudas, vidutinio stiprumo	8.3	65.15	3.0					2.2	22	–
5	Smėlingas mažo plastiškumo molis, moreninis, saClL, rudas-tamsiai rudas, stiprus	12.0	61.45	3.7					2.7	26	–
									3.3	31	–

CPT Nr. 1

Data : 2024.07.04 Altitude : 73.45 m

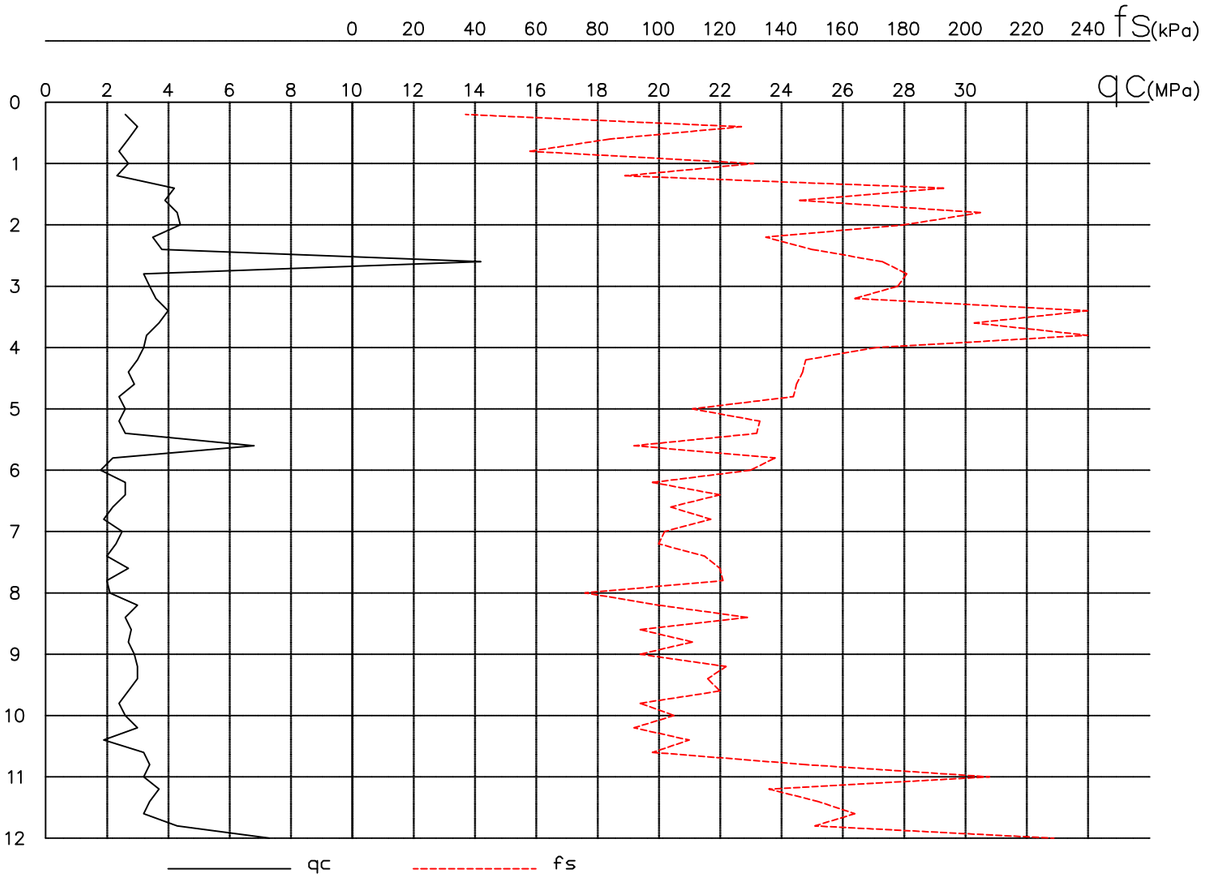

Rapasta	LGT leidimo Nr. 30 Gedimino g. 47-217 LT - 44242, Kaunas info@rapasta.lt	OBJEKTAS : Universalaus sporto paskirties inžinierinių statinių (11.) komplekso Veiverių pl. 132, Kauno m., statybos projektas
PAREIGOS	PAVARDĖ / PARAŠAS	BRĖŽINYS : Gręžinio Nr. 1 stulpelis ir statinio zondavimo (CPT) grafikas
Lauko darbų geologas	A. Motūza	
Brėžinį paruošė inž. geologas	E. Belozaras	
	Data 2024 07	

Gr. Nr. 2

Data: 2024.07.03 Altitude : 73.57 m

Inž. geologinio sluoksnio Nr.	Grunto aprašymas pagal LST EN ISO 14688-1:2018 ir LGT direktoriaus įsakymą Nr. 1-175 (2019 m)	Sluoksnio gylis	Altitude	Sluoksnio storis	Stulpelis	Vandens lygis: Pasirodo	Vandens lygis: Nusist.	Vandens lygis: Maks.	Pagal CPT duomenis: qc (MPa)	Eo (MPa)	Vidaus. tr. laipsniais
	Dirvožemis	0.1	73.47	0.1				0.10 73.47			
1	Supiltas gruntas: smėlingas gruntas su dirvožemiu, Mg	0.5	73.07	0.4					3.6	3.6	–
3	Smėlingas mažo plastiškumo molis, saCIL, rudas-margas (sluoksniuotas), su smėlio lęšiais, stiprus	2.0	71.57	1.5					2.7	18	–
5	Smėlingas mažo plastiškumo molis, moreninis, saCIL, rudas-tamsiai rudas, su smėlio lęšiais, nuo 11,0 m gylio su gausiu žvirgždu, stiprus	12.0	61.57	10.0		Nesutiktas			3.0	29	–
									2.6	25	–
									3.5	32	–

CPT Nr. 2

Data : 2024.07.03 Altitude : 73.57 m

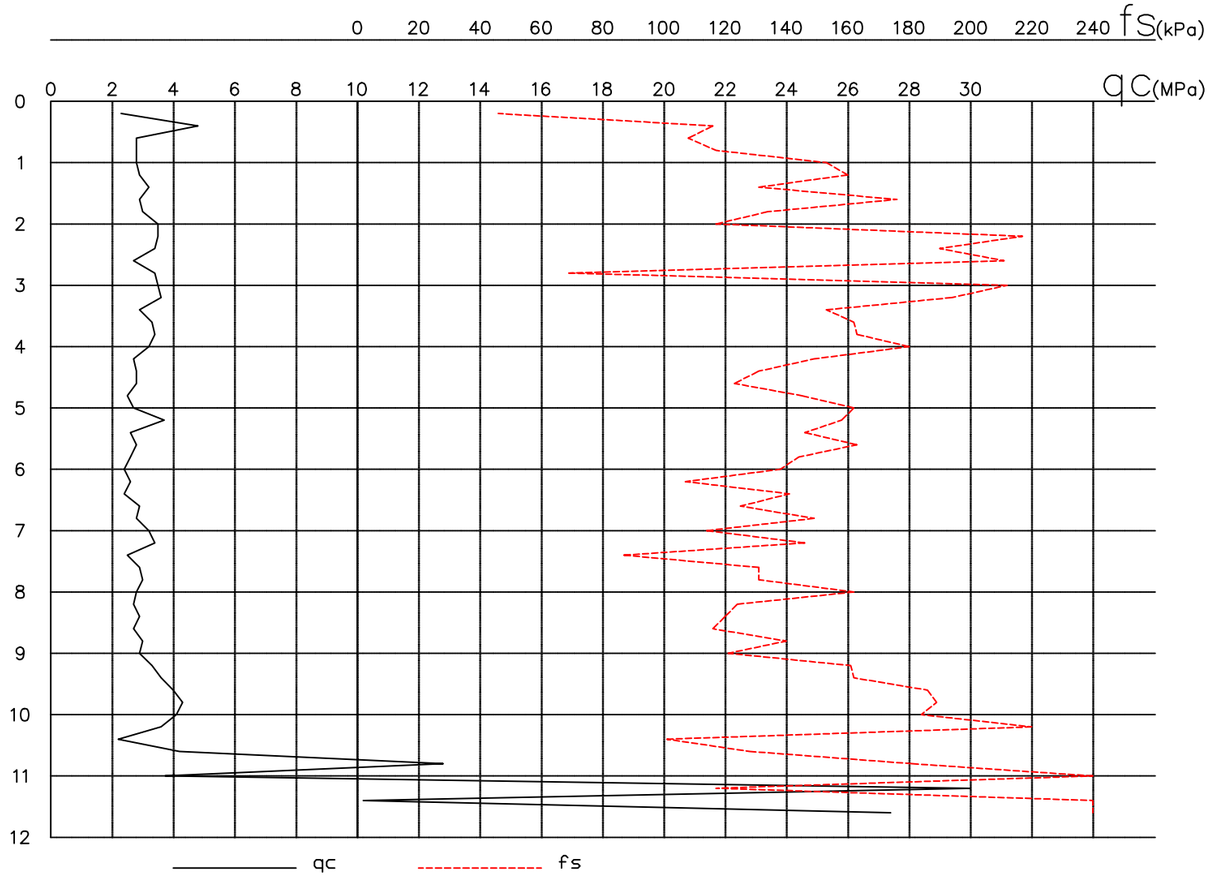

SUTARTINIAI ŽENKLAI

▲ — Grunto bandinys (suardytos struktūros)

▦ — Grunto bandinys (nesuardytos struktūros)

Rapasta	LGT leidimo Nr. 30 Gedimino g. 47-217 LT - 44242, Kaunas info@rapasta.lt		OBJEKTAS : Universalaus sporto paskirties inžinierinių statinių (11.) komplekso Veiverių pl. 132, Kauno m., statybos projektas
PAREIGOS	PAVARDĖ	PARAŠAS	BRĖŽINYS : Gręžinio Nr. 2 stulpelis ir statinio zondavimo (CPT) grafikas
Lauko darbų geologas	A. Motūza		
Brėžinį paruošė inž. geologas	E. Belozaras		
	Data	2024 07	

Gr. Nr. 3

Data: 2024.07.03 Altitude : 73.55 m

Inž. geologinio sluoksnio Nr.	Grunto aprašymas pagal LST EN ISO 14688-1:2018 ir LGT direktoriaus įsakymą Nr. 1-175 (2019 m)	Sluoksnio gylis	Altitude	Sluoksnio storis	Stulpelis	Vandens lygis: Pasirodo	Vandens lygis: Nusist.	Vandens lygis: Maks.	Pagal CPT duomenis: qc (MPa)	Pagal CPT duomenis: Eo (MPa)	Pagal CPT duomenis: Vidaus tr. laipsniais
	Dirvožemis	0.3	73.25	0.3				0.30	–	–	–
1	Supiltas gruntas: molingas gruntas su smėlio priemaiša, Mg	0.6	72.95	0.3				73.25	1.8	1.8	–
2	Smėlingas mažo plastiškumo molis, saClL, rudas-margas (sluoksniuotas), su smėlio lęšiais, vidutinio stiprumo	2.0	71.55	1.4					2.2	15	–
5	Smėlingas mažo plastiškumo molis, moreninis, saClL, rudas-tamsiai rudas, stiprus	12.0	61.55	10.0		Nesutiktas			3.8	34	–
									2.7	26	–
									3.4	31	–

CPT Nr. 3

Data : 2024.07.03 Altitude : 73.55 m

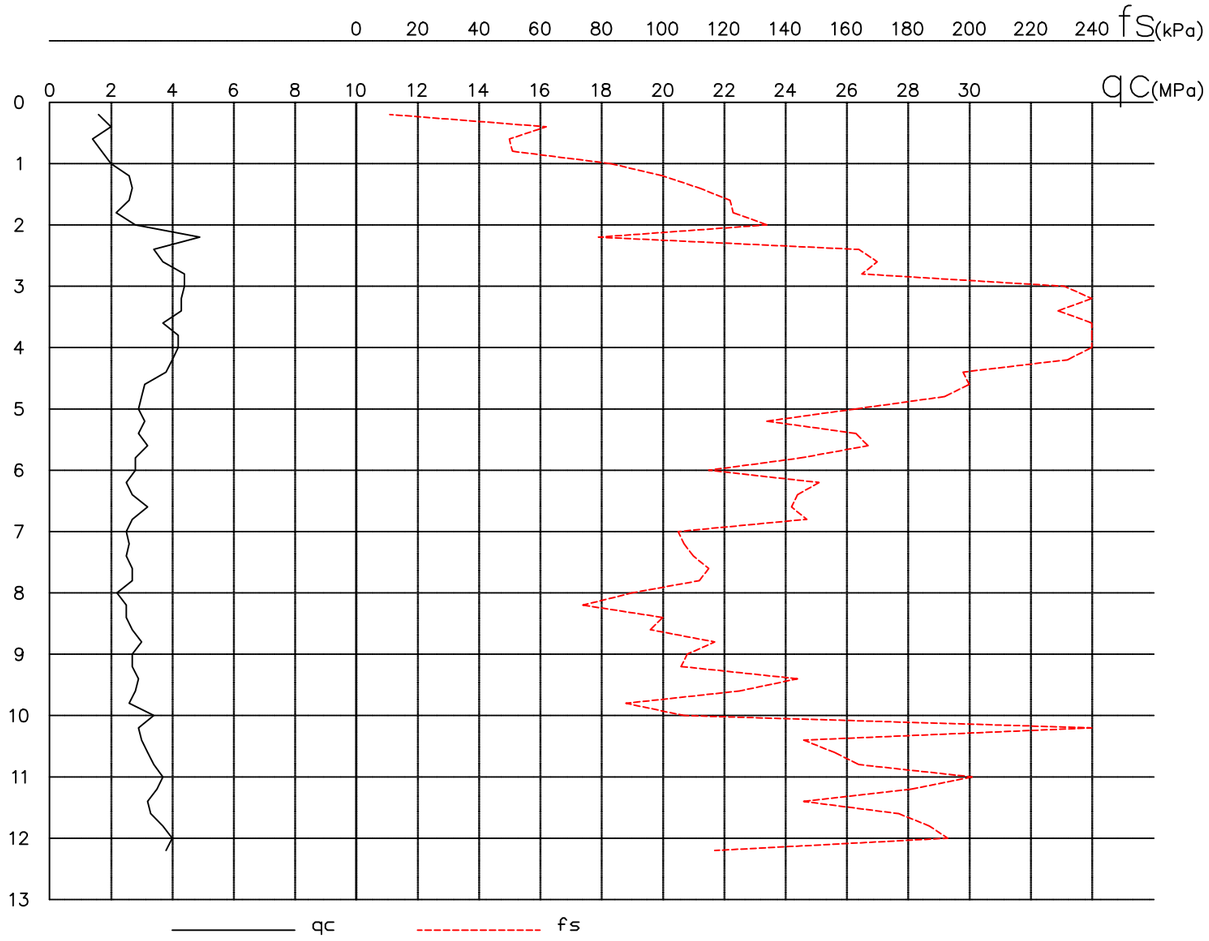

SUTARTINIAI ŽENKLAI

▲ — Grunto bandinys (suardytos struktūros)

▦ — Grunto bandinys (nesuardytos struktūros)

Rapasta	LGT leidimo Nr. 30 Gedimino g. 47-217 LT - 44242, Kaunas info@rapasta.lt	OBJEKTAS : Universalaus sporto paskirties inžinierinių statinių (11.) komplekso Veiverių pl. 132, Kauno m., statybos projektas
PAREIGOS	PAVARDĖ	PARAŠAS
Lauko darbų geologas	A. Motūza	
Brėžinį paruošė inž. geologas	E. Belozaras	BRĖŽINYS : Gręžinio Nr. 3 stulpelis ir statinio zondavimo (CPT) grafikas
	Data 2024 07	

Gr. Nr. 4

Data: 2024.07.03 Altitude : 73.52 m

Inž. geologinio sluoksnio Nr.	Grunto aprašymas pagal LST EN ISO 14688-1:2018 ir LGT direktoriaus įsakymą Nr. 1-175 (2019 m)	Sluoksnio gylis	Altitude	Sluoksnio storis	Stulpelis	Vandens lygis: Pasirodo	Vandens lygis: Nusist.	Vandens lygis: Maks.	Pagal CPT duomenis: qc (MPa)	Pagal CPT duomenis: Eo (MPa)	Pagal CPT duomenis: Vidaus tr. laipsnis
	Dirvožemis	0.2	73.32	0.2				0.20	-	-	-
1	Supiltas gruntas: smėlingas gruntas su dirvožemiu, Mg	0.5	73.02	0.3				73.32	0.9	0.9	-
2	Smėlingas mažo plastiškumo molis, saCIL, rudas-margas (sluoksniuotas), su smėlio lęšiais, vidutinio stiprumo	2.2	71.32	1.7					2.0	14	–
5	Smėlingas mažo plastiškumo molis, moreninis, saCIL, rudas-tamsiai rudas, stiprus	4.2	69.32	2.0					4.0	36	–
		6.7	66.82	2.5		Nesutiktas			3.0	29	–
4	Smėlingas mažo plastiškumo molis, moreninis, saCIL, rudas-tamsiai rudas, vidutinio stiprumo	8.5	65.02	1.8					2.3	23	–
5	Smėlingas mažo plastiškumo molis, moreninis, saCIL, rudas-tamsiai rudas, stiprus	12.0	61.52	3.5					3.5	32	–

CPT Nr. 4

Data : 2024.07.03 Altitude : 73.52 m

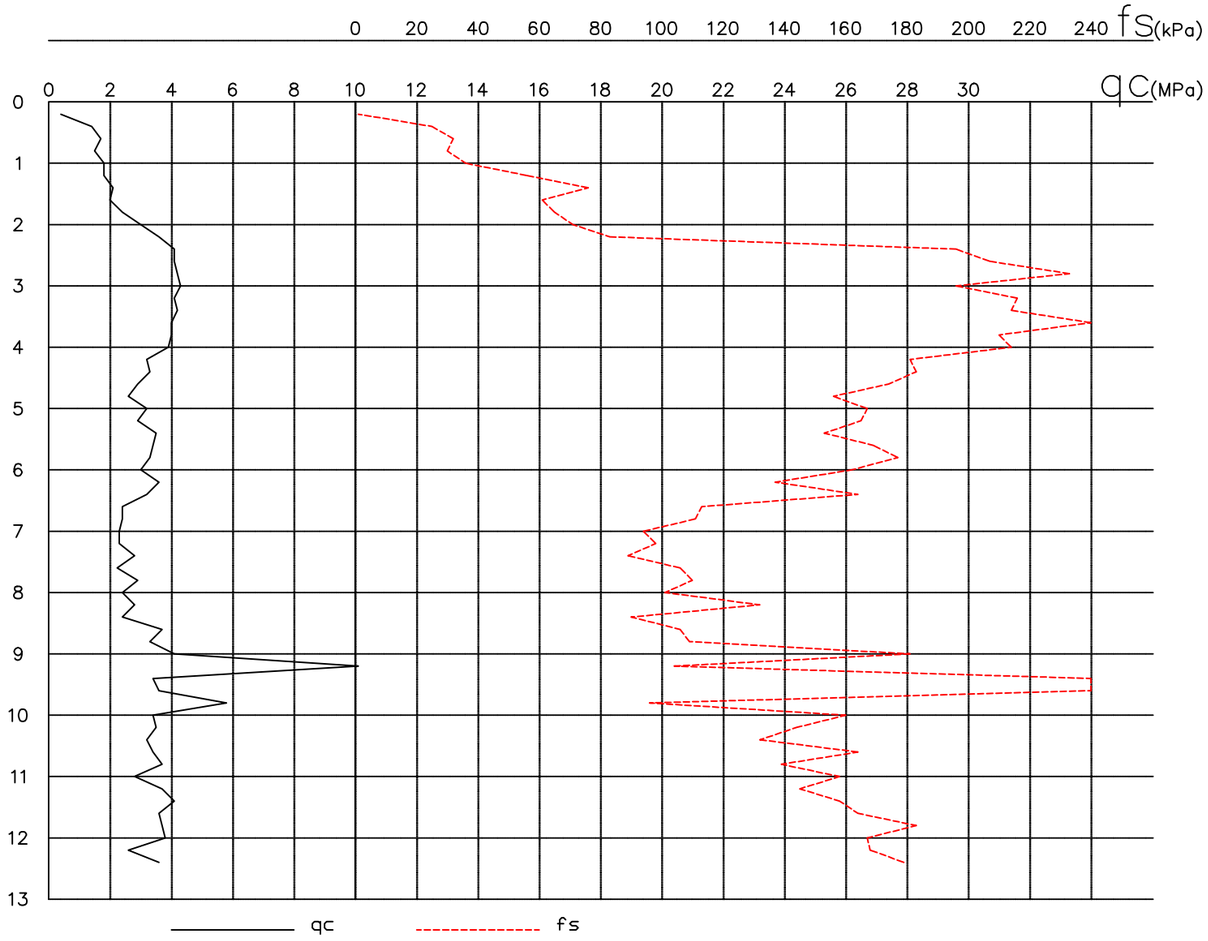

SUTARTINIAI ŽENKLAI

▲ — Grunto bandinys (suardytos struktūros)

▦ — Grunto bandinys (nesuardytos struktūros)

Rapasta	LGT leidimo Nr. 30 Gedimino g. 47-217 LT - 44242, Kaunas info@rapasta.lt	OBJEKTAS : Universalaus sporto paskirties inžinierinių statinių (11.) komplekso Veiverių pl. 132, Kauno m., statybos projektas
PAREIGOS	PAVARDĖ	PARAŠAS
Lauko darbų geologas	A. Motūza	
Brėžinį paruošė inž. geologas	E. Belozaras	BRĖŽINYS : Gręžinio Nr. 4 stulpelis ir statinio zondavimo (CPT) grafikas
	Data 2024 07	

Gr. Nr. 5

Data: 2024.07.03 Altitude : 73.65 m

Inž. geologinio sluoksnio Nr.	Grunto aprašymas pagal LST EN ISO 14688-1:2018 ir LGT direktoriaus įsakymą Nr. 1-175 (2019 m)	Sluoksnio gylis	Altitude	Sluoksnio storis	Stulpelis	Vandens lygis: Pasirodo	Vandens lygis: Nusist.	Vandens lygis: Maks.	Pagal CPT duomenis: qc (MPa)	Pagal CPT duomenis: Eo (MPa)	Pagal CPT duomenis: Vidaus tr. laipsnis
	Dirvožemis	0.2	73.45	0.2				0.20			
1	Supiltas gruntas: smėlingas gruntas su dirvožemiu, Mg	0.5	73.15	0.3				73.45	3.3	3.3	–
2	Smėlingas mažo plastiškumo molis, saClL, rudas-margas (sluoksniuotas),su smėlio lęšiais, vidutinio stiprumo	1.6	72.05	1.1					2.2	15	–
5	Smėlingas mažo plastiškumo molis, moreninis, saClL, rudas-tamsiai rudas, stiprus	4.0	69.65	2.4					3.2	30	–
		6.0	67.65	2.0		Nesutiktas			2.6	25	–
4	Smėlingas mažo plastiškumo molis, moreninis, saClL, rudas-tamsiai rudas, vidutinio stiprumo	8.4	65.25	2.4					2.2	22	–
5	Smėlingas mažo plastiškumo molis, moreninis, saClL, rudas-tamsiai rudas, stiprus	12.0	61.65	3.6					3.3	31	–

CPT Nr. 5

Data : 2024.07.03 Altitude : 73.65 m

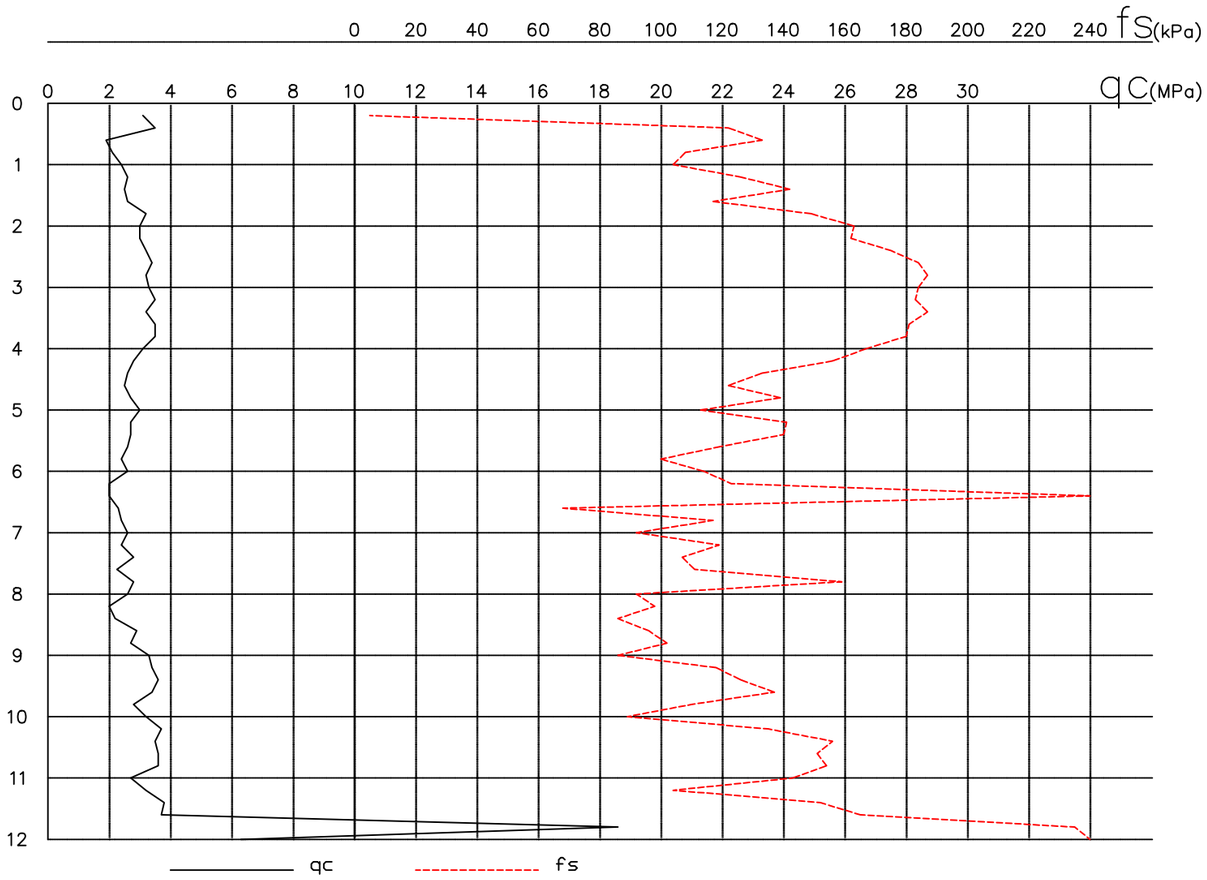

SUTARTINIAI ŽENKLAI

▲ — Grunto bandinys (suardytos struktūros)

▦ — Grunto bandinys (nesuardytos struktūros)

Rapasta

LGT leidimo Nr. 30
Gedimino g. 47-217
LT - 44242, Kaunas
info@rapasta.lt

OBJEKTAS : Universalaus sporto paskirties inžinierinių statinių (11.) komplekso Veiverių pl. 132, Kauno m., statybos projektas

PAREIGOS	PAVARDĖ	PARAŠAS
Lauko darbų geologas	A. Motūza	
Brėžinį paruošė inž. geologas	E. Belozaras	
	Data	2024 07

BRĖŽINYS : Gręžinio Nr. 5 stulpelis ir statinio zondavimo (CPT) grafikas

Gr. Nr. 6

Data: 2024.07.03 Altitude : 73.70 m

Inž. geologinio sluoksnio Nr.	Grunto aprašymas pagal LST EN ISO 14688-1:2018 ir LGT direktoriaus įsakymą Nr. 1-175 (2019 m)	Sluoksnio gylis	Altitude	Sluoksnio storis	Stulpelis	Vandens lygis: Pasirodo	Vandens lygis: Nusist.	Vandens lygis: Maks.	Pagal CPT duomenis: qc (MPa)	Pagal CPT duomenis: Eo (MPa)	Pagal CPT duomenis: Vidaus tr. laipsniais
	Dirvožemis	0.2	73.50	0.2				0.20 73.50	-	-	-
1	Supiltas gruntas: smėlis, gelsvas, Mg	0.6	73.10	0.4					3.6	3.6	–
2	Smėlingas mažo plastiškumo molis, saClL, rudas-margas (sluoksniuotas),su smėlio lęšiais, vidutinio stiprumo	1.4	72.30	0.8					2.2	15	–
5	Smėlingas mažo plastiškumo molis, moreninis, saClL, rudas-tamsiai rudas, stiprus	6.4	67.30	5.0		Nesutiktas			3.7	34	–
									2.5	25	–
4	Smėlingas mažo plastiškumo molis, moreninis, saClL, rudas-tamsiai rudas, vidutinio stiprumo	8.4	65.30	2.0					2.0	20	–
5	Smėlingas mažo plastiškumo molis, moreninis, saClL, rudas-tamsiai rudas, stiprus	12.0	61.70	3.6					2.7	26	–

CPT Nr. 6

Data : 2024.07.03 Altitude : 73.70 m

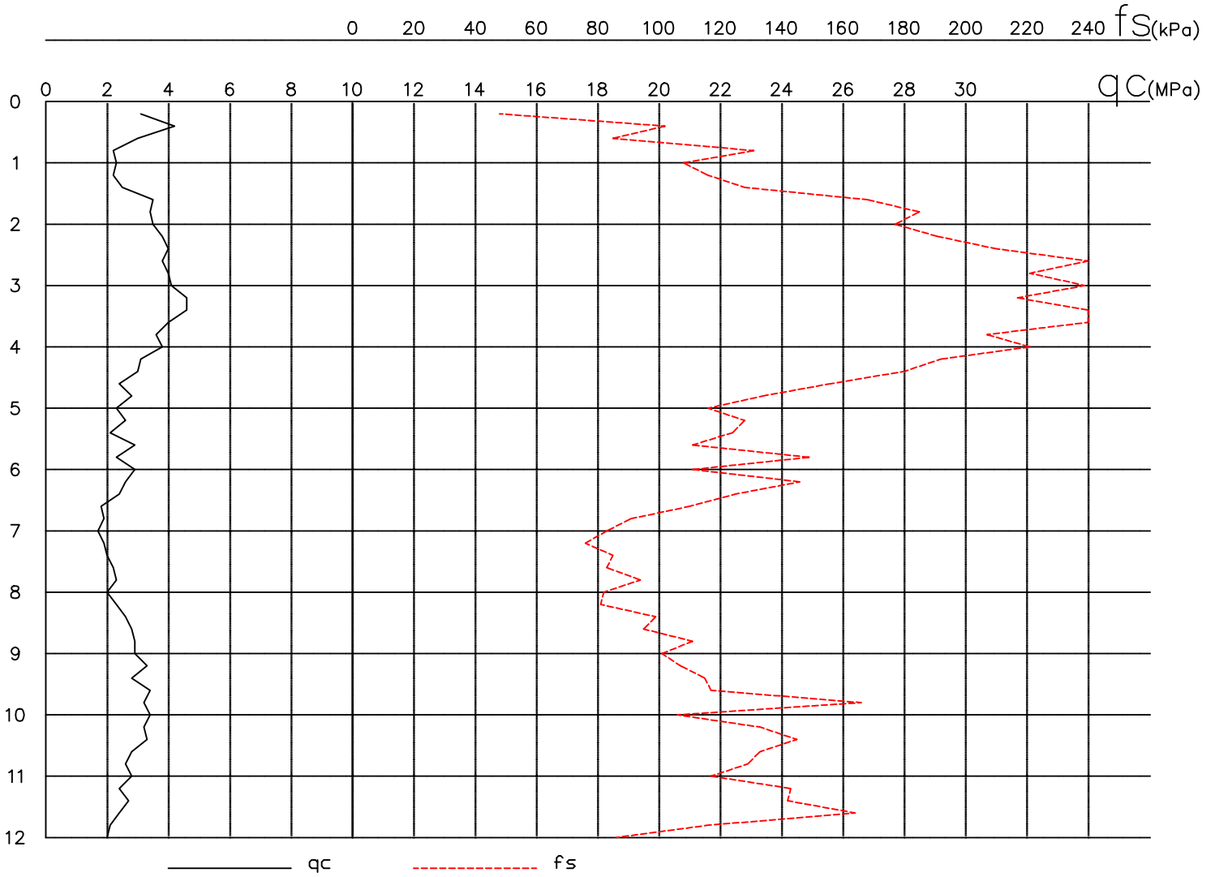

SUTARTINIAI ŽENKLAI

▲ — Grunto bandinys (suardytos struktūros)

▦ — Grunto bandinys (nesuardytos struktūros)

Rapasta

LGT leidimo Nr. 30
Gedimino g. 47-217
LT - 44242, Kaunas
info@rapasta.lt

OBJEKTAS : Universalaus sporto paskirties inžinierinių statinių (11.) komplekso Veiverių pl. 132, Kauno m., statybos projektas

PAREIGOS	PAVARDĖ	PARAŠAS
Lauko darbų geologas	A. Motūza	
Brėžinį paruošė inž. geologas	E. Belozaras	
	Data	2024 07

BRĖŽINYS : Gręžinio Nr. 6 stulpelis ir statinio zondavimo (CPT) grafikas

Gr. Nr. 7

Data: 2024.07.04 Altitude : 73.60 m

Inž. geologinio sluoksnio Nr.	Grunto aprašymas pagal LST EN ISO 14688-1:2018 ir LGT direktoriaus įsakymą Nr. 1-175 (2019 m)	Sluoksnio gylis	Altitude	Sluoksnio storis	Stulpelis	Vandens lygis: Pasirodo	Vandens lygis: Nusist.	Vandens lygis: Maks.	Pagal CPT duomenis: qc (MPa)	Pagal CPT duomenis: Eo (MPa)	Pagal CPT duomenis: Vidaus tr. klampumas
	Dirvožemis	0.2	73.40	0.2				0.20	–	–	–
1	Supiltas gruntas: molingas gruntas su dirvožemio priemaiša, Mg	0.4	73.20	0.2				73.40	1.5	1.5	–
2	Smėlingas mažo plastiškumo molis, saClL, rudas-margas (sluoksniuotas),su smėlio lęšiais, vidutinio stiprumo	1.8	71.80	1.4					1.7	11	–
5	Smėlingas mažo plastiškumo molis, moreninis, saClL, rudas-tamsiai rudas, stiprus	6.4	67.20	4.6		Nesutiktas			3.4	32	–
									2.9	28	–
4	Smėlingas mažo plastiškumo molis, moreninis, saClL, rudas-tamsiai rudas, vidutinio stiprumo	8.2	65.40	1.8					2.2	22	–
5	Smėlingas mažo plastiškumo molis, moreninis, saClL, rudas-tamsiai rudas, stiprus	12.0	61.60	3.8					2.9	28	–

CPT Nr. 7

Data : 2024.07.04 Altitude : 73.60 m

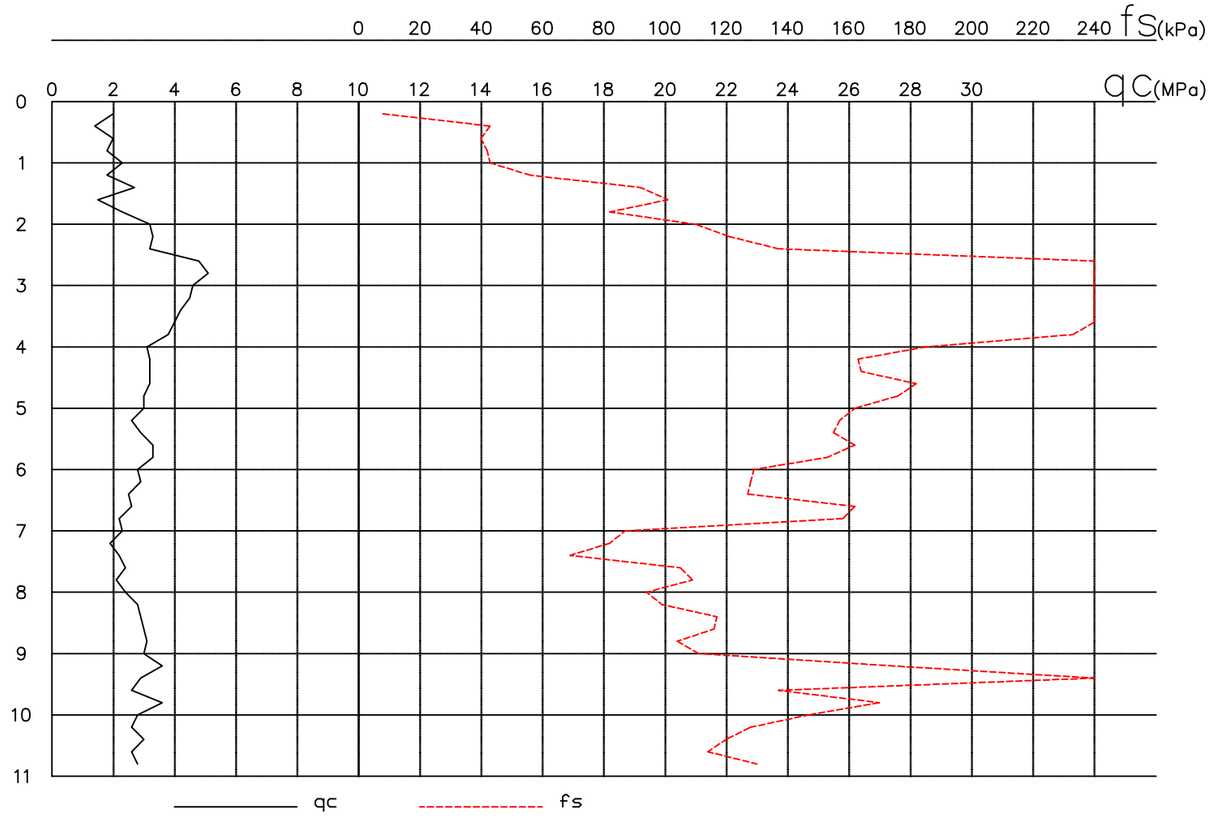

Rapasta	LGT leidimo Nr. 30 Gedimino g. 47-217 LT - 44242, Kaunas info@rapasta.lt	OBJEKTAS : Universalaus sporto paskirties inžinierinių statinių (11.) komplekso Veiverių pl. 132, Kauno m., statybos projektas
PAREIGOS	PAVARDĖ / PARAŠAS	BRĖŽINYS : Gręžinio Nr. 7 stulpelis ir statinio zondavimo (CPT) grafikas
Lauko darbų geologas	A. Motūza	
Brėžinį paruošė inž. geologas	E. Belozaras	
	Data 2024 07	

Gr. Nr. 8

Data: 2024.07.08 Altitude : 73.90 m

Inž. geologinio sluoksnio Nr.	***Grunto aprašymas*** pagal LST EN ISO 14688-1:2018 ir LGT direktoriaus įsakymą Nr. 1-175 (2019 m)	Sluoksnio gylis	Altitude	Sluoksnio storis	Stulpelis	Vandens lygis: Pasirodo	Vandens lygis: Nusist.	Vandens lygis: Maks.	Pagal CPT duomenis: qc (MPa)	Pagal CPT duomenis: Eo (MPa)	Pagal CPT duomenis: Vidaus tr. laipsniais
	~~Dirvožemis~~	~~0.1~~	~~73.80~~	~~0.1~~				0.10 73.80			
1	Supiltas gruntas: smėlingas gruntas su dirvožemiu, Mg	0.7	73.20	0.6					3.1	3.1	–
2	Smėlingas mažo plastiškumo molis, saClL, rudas-margas (sluoksniuotas),su smėlio lęšiais, vidutinio stiprumo	2.2	71.70	1.5					2.1	14	–
5	Smėlingas mažo plastiškumo molis, moreninis, saClL, rudas-tamsiai rudas, stiprus	6.0	67.90	3.8		Nesutiktas			3.2	30	–
									4.0	36	–
									2.7	26	–

CPT Nr. 8

Data : 2024.07.08 Altitude : 73.90 m

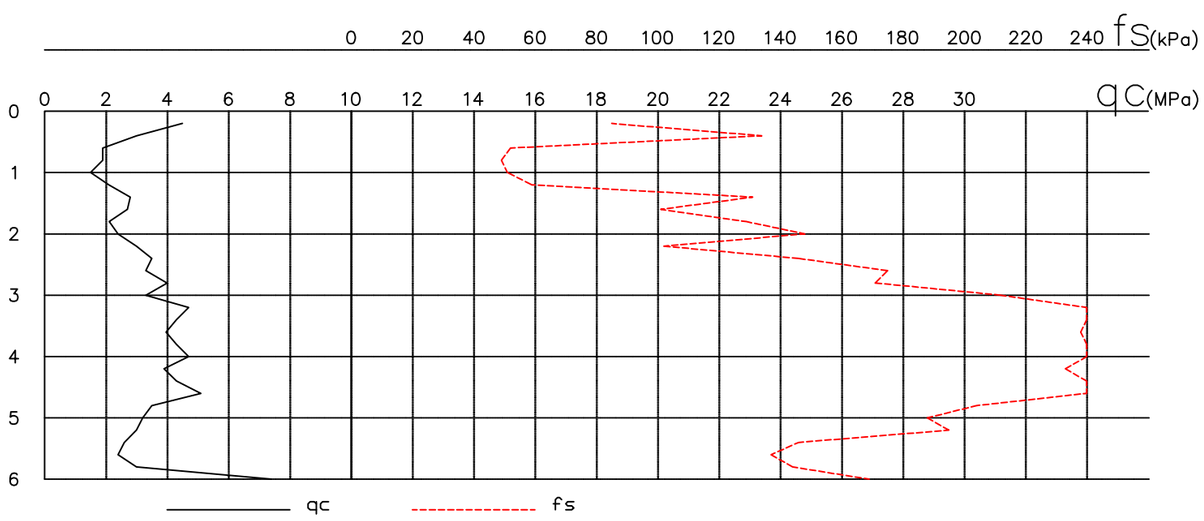

Rapasta	LGT leidimo Nr. 30 Gedimino g. 47-217 LT - 44242, Kaunas info@rapasta.lt		OBJEKTAS : Universalaus sporto paskirties inžinierinių statinių (11.) komplekso Veiverių pl. 132, Kauno m., statybos projektas
PAREIGOS	PAVARDĖ	PARAŠAS	~~BRĖŽINYS~~ : Gręžinio Nr. 8 stulpelis ir statinio zondavimo (CPT) grafikas
Lauko darbų geologas	A. Motūza		
Brėžinį paruošė inž. geologas	E. Belozaras		
	Data	2024 07	

Gr. Nr. 9

Data: 2024.07.04 Altitude : 73.98 m

Inž. geologinio sluoksnio Nr.	Grunto aprašymas pagal LST EN ISO 14688-1:2018 ir LGT direktoriaus įsakymą Nr. 1-175 (2019 m)	Sluoksnio gylis	Altitude	Sluoksnio storis	Stulpelis	Vandens lygis: Pasirodo	Vandens lygis: Nusist.	Vandens lygis: Maks.	Pagal CPT duomenis: qc (MPa)	Pagal CPT duomenis: Eo (MPa)	Pagal CPT duomenis: Vidaus tr. laipsniais
	Dirvožemis	0.1	73.88	0.1				0.10 73.88			
1	Supiltas gruntas: molingas gruntas su žvyro priemaiša, Mg	0.6	73.38	0.5					8.0	8	–
	Supiltas gruntas: molingas gruntas su dirvožemio priemaiša, Mg	1.0	72.98	0.4					1.0	1	–
2	Smėlingas mažo plastiškumo molis, saCIL, rudas-margas (sluoksniuotas),su smėlio lęšiais, vidutinio stiprumo	1.7	72.28	0.7					1.6	11	–
5	Smėlingas mažo plastiškumo molis, moreninis, saCIL, rudas-tamsiai rudas, stiprus	6.3	67.68	4.6			Nesutiktas		3.7	34	–
4	Smėlingas mažo plastiškumo molis, moreninis, saCIL, rudas-tamsiai rudas, vidutinio stiprumo	7.5	66.48	1.2					3.0	29	–
5	Smėlingas mažo plastiškumo molis, moreninis, saCIL, rudas-tamsiai rudas, stiprus	12.0	61.98	4.5					3.1	29	–
									3.7	34	–

CPT Nr. 9

Data : 2024.07.04 Altitude : 73.98 m

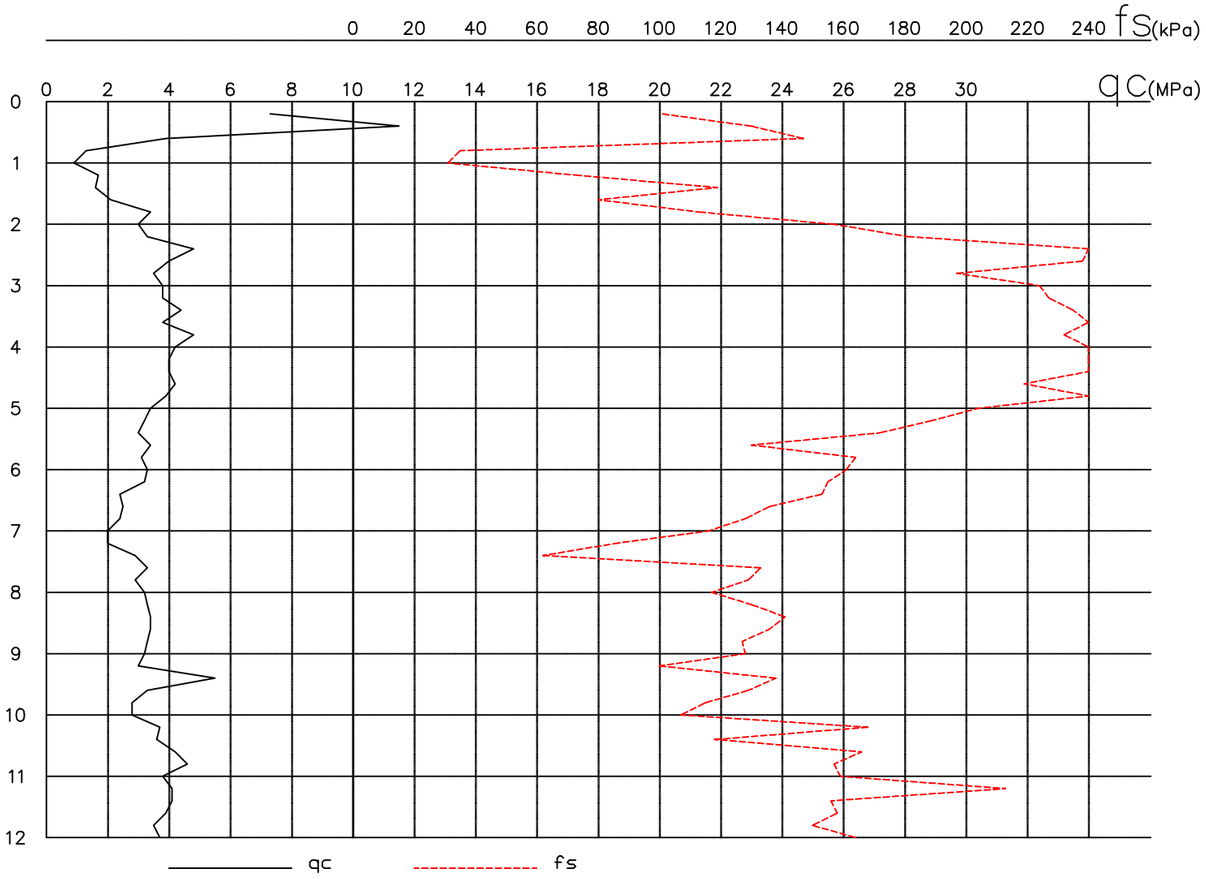

SUTARTINIAI ŽENKLAI

▲ — Grunto bandinys (suardytos struktūros)

▦ — Grunto bandinys (nesuardytos struktūros)

Rapasta

LGT leidimo Nr. 30
Gedimino g. 47-217
LT - 44242, Kaunas
info@rapasta.lt

OBJEKTAS : Universalaus sporto paskirties inžinierinių statinių (11.) komplekso Veiverių pl. 132, Kauno m., statybos projektas

PAREIGOS	PAVARDĖ	PARAŠAS
Lauko darbų geologas	A. Motūza	
Brėžinį paruošė inž. geologas	E. Belozaras	
	Data	2024 07

BRĖŽINYS : Gręžinio Nr. 9 stulpelis ir statinio zondavimo (CPT) grafikas

Gr. Nr. 10

Data: 2024.07.04 Altitude : 73.92 m

Inž. geologinio sluoksnio Nr.	Grunto aprašymas pagal LST EN ISO 14688-1:2018 ir LGT direktoriaus įsakymą Nr. 1-175 (2019 m)	Sluoksnio gylis	Altitude	Sluoksnio storis	Stulpelis	Vandens lygis: Pasirodo	Vandens lygis: Nusist.	Vandens lygis: Maks.	Pagal CPT duomenis: qc (MPa)	Pagal CPT duomenis: Eo (MPa)	Pagal CPT duomenis: Vidaus tr. laipsniais
	Dirvožemis	0.2	73.72	0.2				0.20 73.72			
1	Supiltas gruntas: molingas gruntas su dirvožemio priemaiša, Mg	0.7	73.22	0.5					1.0	1	–
2	Smėlingas mažo plastiškumo molis, saCIL, rudas-margas (sluoksniuotas),su smėlio lęšiais, vidutinio stiprumo	2.3	71.62	1.6					2.0	14	–
5	Smėlingas mažo plastiškumo molis, moreninis, saCIL, rudas-tamsiai rudas, stiprus	6.3	67.62	4.0		Nesutiktas			2.5 3.5 2.6	25 32 25	– – –
4	Smėlingas mažo plastiškumo molis, moreninis, saCIL, rudas-tamsiai rudas, vidutinio stiprumo	7.3	66.62	1.0					2.1	21	–
5	Smėlingas mažo plastiškumo molis, moreninis, saCIL, rudas-tamsiai rudas, stiprus	12.0	61.92	4.7					2.7	26	–

CPT Nr. 10

Data : 2024.07.04 Altitude : 73.92 m

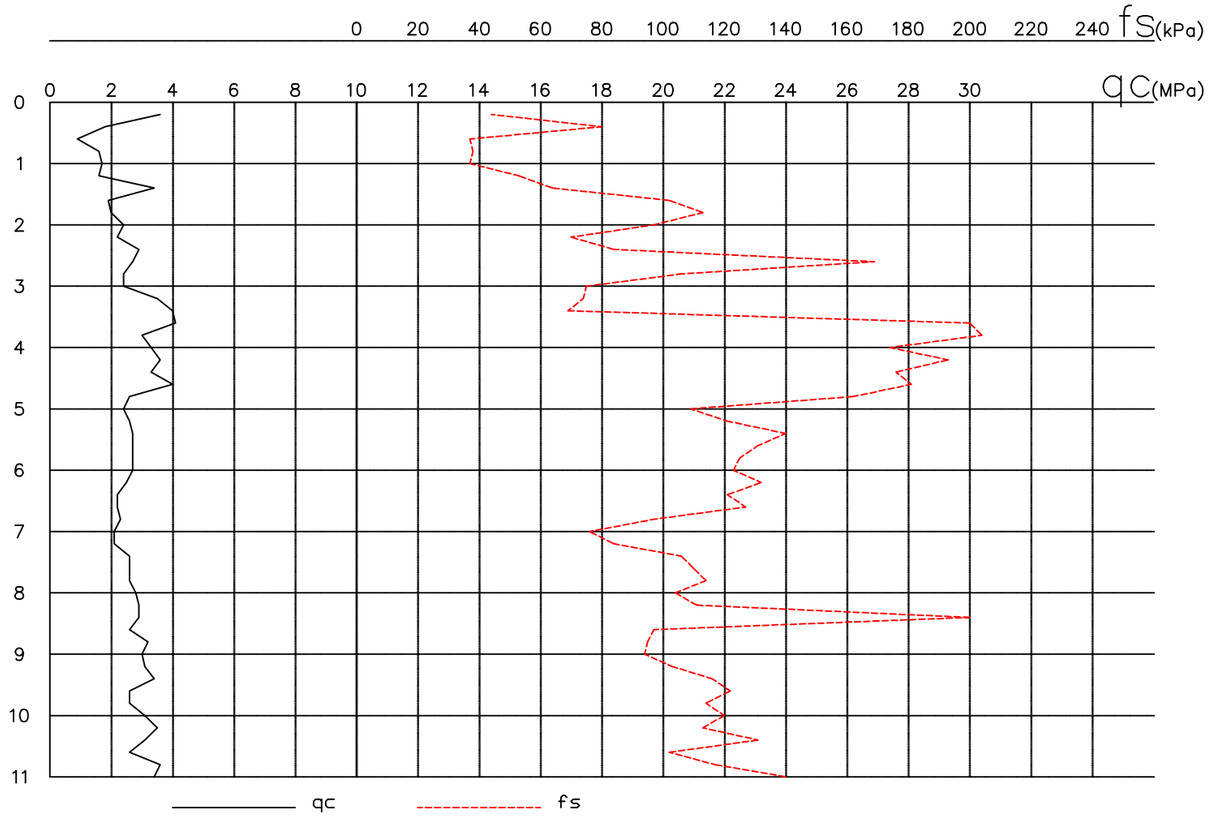

Rapasta	LGT leidimo Nr. 30 Gedimino g. 47-217 LT - 44242, Kaunas info@rapasta.lt	OBJEKTAS : Universalaus sporto paskirties inžinierinių statinių (11.) komplekso Veiverių pl. 132, Kauno m., statybos projektas
PAREIGOS	PAVARDĖ / PARAŠAS	BRĖŽINYS : Gręžinio Nr. 10 stulpelis ir statinio zondavimo (CPT) grafikas
Lauko darbų geologas	A. Motūza	
Brėžinį paruošė inž. geologas	E. Belozaras	
	Data 2024 07	

Gr. Nr. 11

Data: 2024.07.05 Altitude : 74.20 m

Inž. geologinio sluoksnio Nr.	Grunto aprašymas pagal LST EN ISO 14688-1:2018 ir LGT direktoriaus įsakymą Nr. 1-175 (2019 m)	Sluoksnio gylis	Altitude	Sluoksnio storis	Stulpelis	Vandens lygis: Pasirodo	Vandens lygis: Nusist.	Vandens lygis: Maks.	Pagal CPT duomenis: qc (MPa)	Pagal CPT duomenis: Eo (MPa)	Pagal CPT duomenis: Vidaus tr. laipsnialis
	Dirvožemis	0.1	74.10					0.10 74.10			
	Supiltas gruntas: smėlingas gruntas su dirvožemiu, Mg	0.4	73.80	0.3					2.1	2.1	–
1	Supiltas gruntas: molingas gruntas su dirvožemio priemaiša, Mg	1.2	73.00	0.8					0.5	0.5	–
2	Smėlingas mažo plastiškumo molis, saClL, rudas-margas (sluoksniuotas),su smėlio lęšiais, vidutinio stiprumo	1.7	72.50	0.5					2.1	14	–
									3.9	35	–
							Nesutiktas		3.0	29	–
5	Smėlingas mažo plastiškumo molis, moreninis, saClL, rudas-tamsiai rudas, stiprus			10.3					2.6	25	–
		12.0	62.20						3.0	29	–

CPT Nr. 11

Data : 2024.07.05 Altitude : 74.20 m

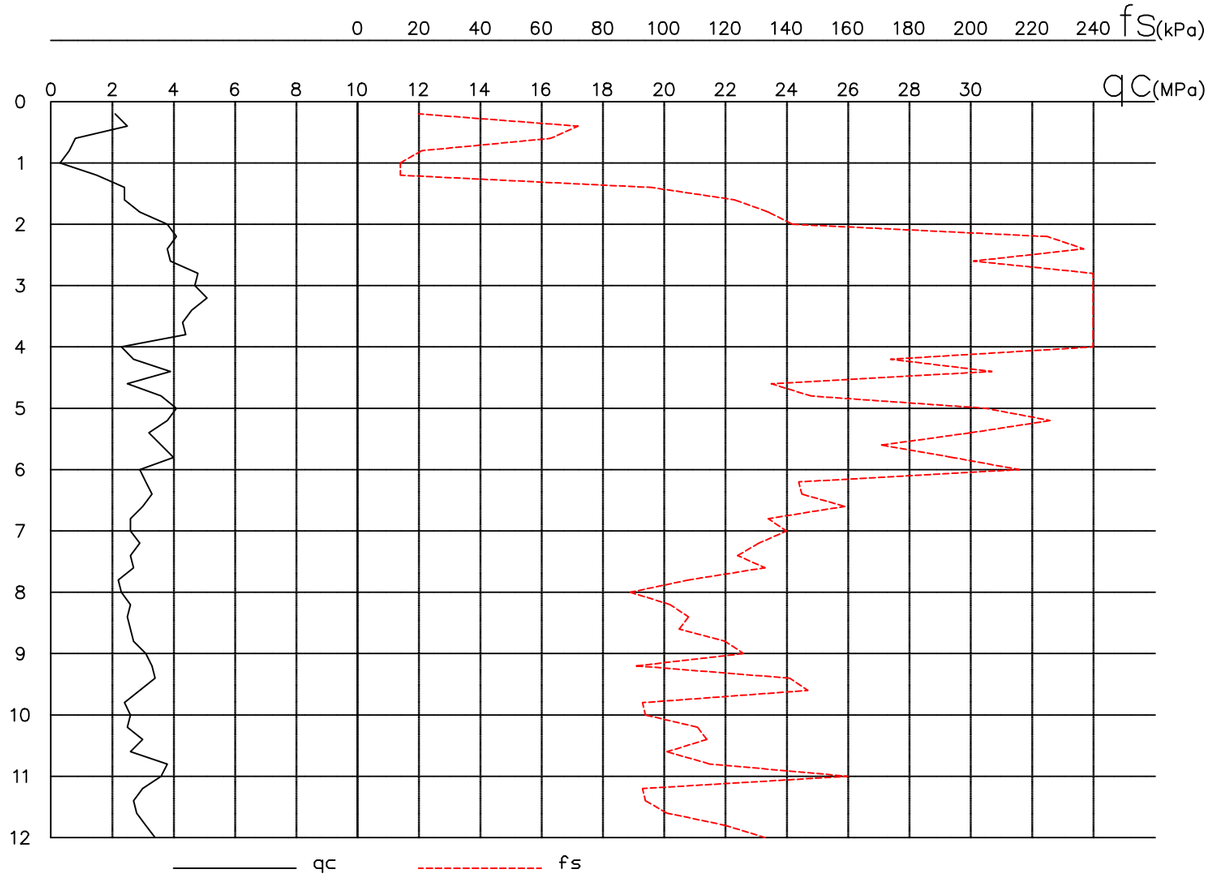

Rapasta	LGT leidimo Nr. 30 Gedimino g. 47-217 LT - 44242, Kaunas info@rapasta.lt	OBJEKTAS : Universalaus sporto paskirties inžinierinių statinių (11.) komplekso Veiverių pl. 132, Kauno m., statybos projektas
PAREIGOS	PAVARDĖ / PARAŠAS	BRĖŽINYS : Gręžinio Nr. 11 stulpelis ir statinio zondavimo (CPT) grafikas
Lauko darbų geologas	A. Motūza	
Brėžinį paruošė inž. geologas	E. Belozaras	
	Data 2024 07	

Gr. Nr. 12

Data: 2024.07.08 Altitude : 73.95 m

Inž. geologinio sluoksnio Nr.	Grunto aprašymas pagal LST EN ISO 14688-1:2018 ir LGT direktoriaus įsakymą Nr. 1-175 (2019 m)	Sluoksnio gylis	Altitude	Sluoksnio storis	Stulpelis	Vandens lygis: Pasirodo	Nusist.	Maks.	Pagal CPT duomenis: qc (MPa)	Eo (MPa)	Vidaus tr. lūpsniais
	Dirvožemis	~~0.1~~	~~73.85~~	0.1				0.10			
1	Supiltas gruntas: molingas gruntas, Mg	0.4	73.55	0.3				73.85	3.0	3	–
2	Smėlingas mažo plastiškumo molis, saClL, rudas-margas (sluoksniuotas), su smėlio lęšiais, vidutinio stiprumo	1.6	72.35	1.2					2.0	14	–
5	Smėlingas mažo plastiškumo molis, moreninis, saClL, rudas-tamsiai rudas, stiprus	12.0	61.95	10.4		Nesutiktas			3.5 3.0	33 29	– –

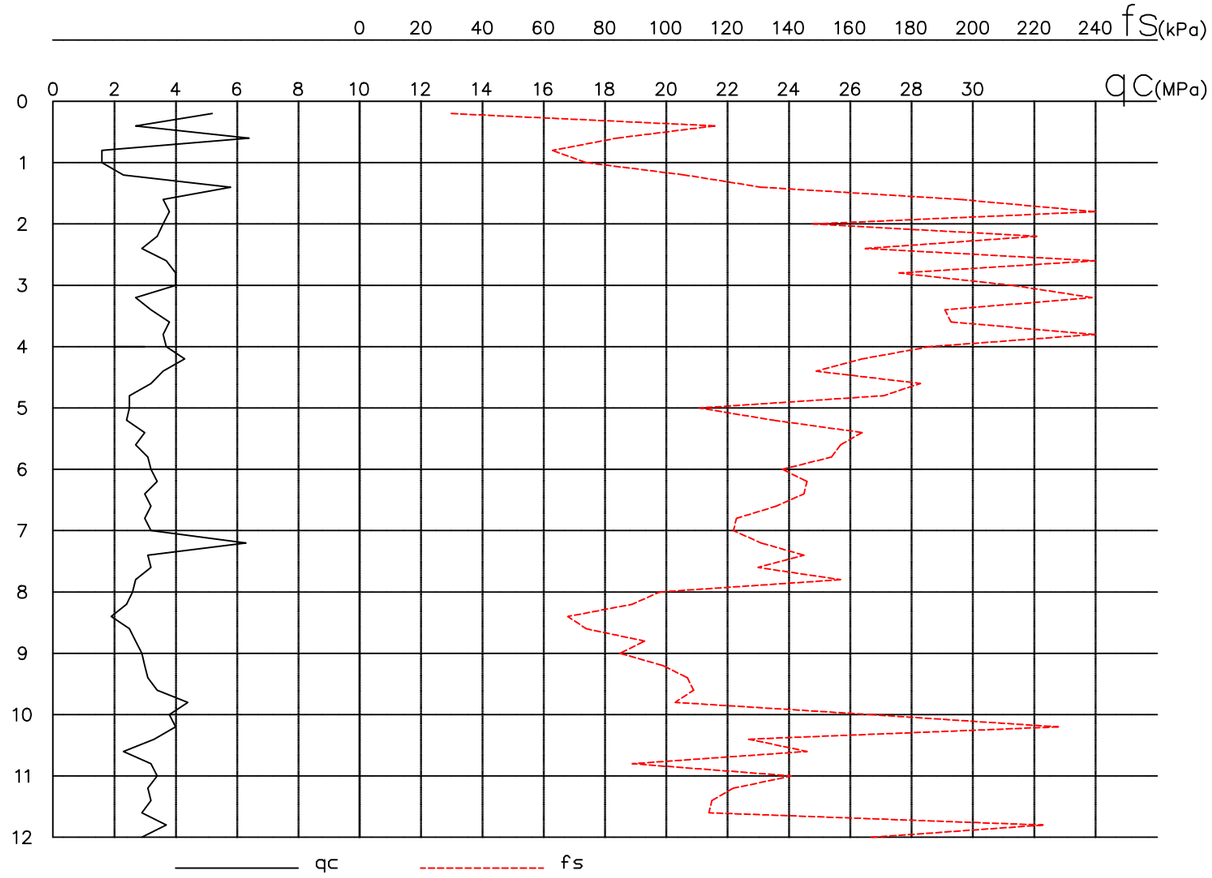

CPT Nr. 12

Data : 2024.07.08 Altitude : 73.95 m

SUTARTINIAI ŽENKLAI

▲ — Grunto bandinys (suardytos struktūros)

▦ — Grunto bandinys (nesuardytos struktūros)

Rapasta

LGT leidimo Nr. 30
Gedimino g. 47-217
LT - 44242, Kaunas
info@rapasta.lt

OBJEKTAS : Universalaus sporto paskirties inžinierinių statinių (11.) komplekso Veiverių pl. 132, Kauno m., statybos projektas

PAREIGOS	PAVARDĖ	PARAŠAS
Lauko darbų geologas	A. Motūza	
Brėžinį paruošė inž. geologas	E. Belozaras	
	Data	2024 07

BRĖŽINYS : Gręžinio Nr. 12 stulpelis ir statinio zondavimo (CPT) grafikas

Gr. Nr. 13

Data: 2024.07.05 Altitude : 74.20 m

Inž. geologinio sluoksnio Nr.	Grunto aprašymas pagal LST EN ISO 14688-1:2018 ir LGT direktoriaus įsakymą Nr. 1-175 (2019 m)	Sluoksnio gylis	Altitude	Sluoksnio storis	Stulpelis	Vandens lygis: Pasirodo	Vandens lygis: Nusist.	Vandens lygis: Maks.	Pagal CPT duomenis: qc (MPa)	Pagal CPT duomenis: Eo (MPa)	Pagal CPT duomenis: Vidaus tr. laipsniais
~~Dirvožemis~~	~~Dirvožemis~~	~~0.1~~	~~74.10~~	~~0.1~~				0.10 74.10			
	Supiltas gruntas: smėlingas gruntas su dirvožemiu, Mg	0.4	73.80	0.3					7.0	7	–
1	Supiltas gruntas: molingas gruntas su organinės medžiagos priemaiša, Mg	1.4	72.80	1.0		1.30 72.90	1.30 72.90		0.7	0.7	–
2	Smėlingas mažo plastiškumo molis, saClL, rusvas (sluoksniuotas), su vandeningo smėlio lęšiais, vidutinio stiprumo	2.6	71.60	1.2					2.1	14	–
5	Smėlingas mažo plastiškumo molis, moreninis, saClL, rudas-tamsiai rudas, stiprus	6.0	68.20	3.4					3.6	33	–
									2.8	27	–

CPT Nr. 13

Data : 2024.07.05 Altitude : 74.20 m

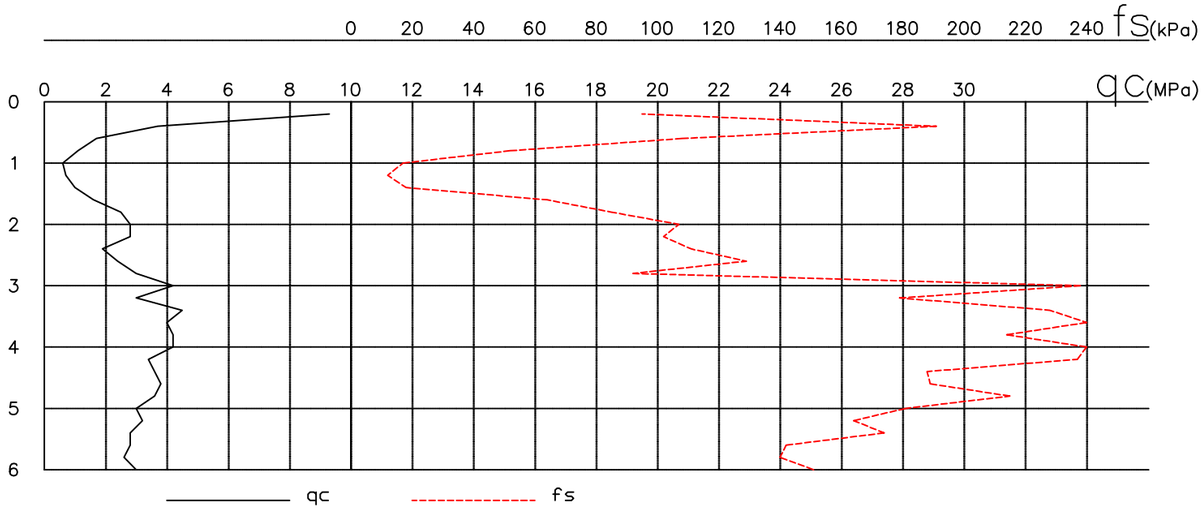

SUTARTINIAI ŽENKLAI

▲ — Grunto bandinys (suardytos struktūros)
▦ — Grunto bandinys (nesuardytos struktūros)
● — Požeminio vandens mėginys

Rapasta	LGT leidimo Nr. 30 Gedimino g. 47-217 LT - 44242, Kaunas info@rapasta.lt	OBJEKTAS : Universalaus sporto paskirties inžinierinių statinių (11.) komplekso Veiverių pl. 132, Kauno m., statybos projektas
PAREIGOS	PAVARDĖ	PARAŠAS
Lauko darbų geologas	A. Motūza	
Brėžinį paruošė inž. geologas	E. Belozaras	BRĖŽINYS : Gręžinio Nr. 13 stulpelis ir statinio zondavimo (CPT) grafikas
	Data 2024 07	

Gr. Nr. 14

Data: 2024.07.04 Altitude : 73.75 m

Inž. geologinio sluoksnio Nr.	Grunto aprašymas pagal LST EN ISO 14688-1:2018 ir LGT direktoriaus įsakymą Nr. 1-175 (2019 m)	Sluoksnio gylis	Altitude	Sluoksnio storis	Stulpelis	Vandens lygis: Pasirodo	Vandens lygis: Nusist.	Vandens lygis: Maks.	Pagal CPT duomenis: qc (MPa)	Pagal CPT duomenis: Eo (MPa)	Pagal CPT duomenis: Vidaus tr. laipsnis
	Dirvožemis	0.2	73.55	0.2				0.20	-	-	-
								73.55			
1	Supiltas gruntas: smėlingas gruntas su dirvožemiu, Mg	0.6	73.15	0.4					1.4	1.4	–
2	Smėlingas mažo plastiškumo molis, saCIL, rudas-margas (sluoksniuotas), su smėlio lęšiais, vidutinio stiprumo	1.4	72.35	0.8					1.5	10	–
									2.8	27	–
5	Smėlingas mažo plastiškumo molis, moreninis, saCIL, rudas-tamsiai rudas, stiprus	4.8	68.95	3.4					3.5	32	–
									2.6	25	–
4	Smėlingas mažo plastiškumo molis, moreninis, saCIL, rudas-tamsiai rudas, vidutinio stiprumo	8.8	64.95	4.0		Nesutiktas			2.2	22	–
									3.0	29	–
5	Smėlingas mažo plastiškumo molis, moreninis, saCIL, rudas-tamsiai rudas, stiprus	12.0	61.75	3.2							

CPT Nr. 14

Data : 2024.07.04 Altitude : 73.75 m

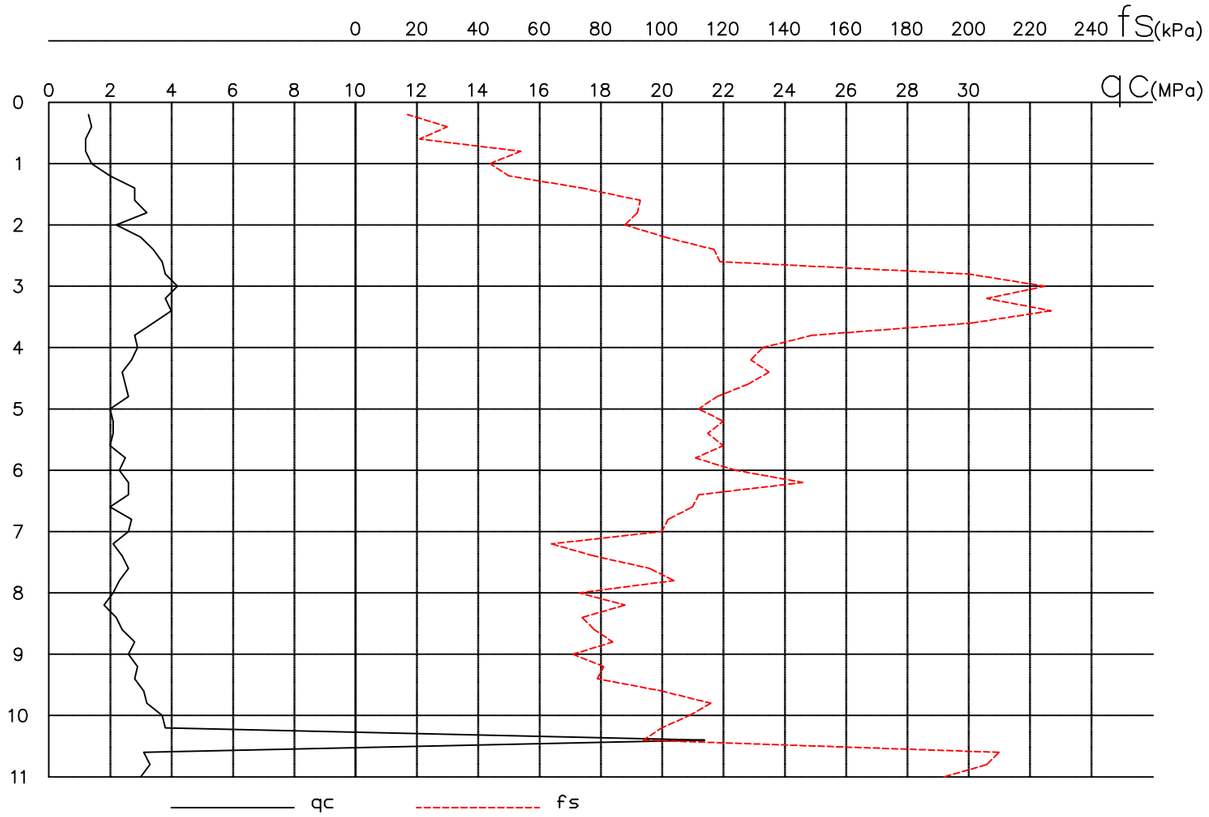

SUTARTINIAI ŽENKLAI

▲ — Grunto bandinys (suardytos struktūros)

▦ — Grunto bandinys (nesuardytos struktūros)

Rapasta

LGT leidimo Nr. 30
Gedimino g. 47-217
LT - 44242, Kaunas
info@rapasta.lt

OBJEKTAS : Universalaus sporto paskirties inžinierinių statinių (11.) komplekso Veiverių pl. 132, Kauno m., statybos projektas

PAREIGOS	PAVARDĖ	PARAŠAS
Lauko darbų geologas	A. Motūza	
Brėžinį paruošė inž. geologas	E. Belozaras	
	Data	2024 07

BRĖŽINYS : Gręžinio Nr. 14 stulpelis ir statinio zondavimo (CPT) grafikas

Gr. Nr. 15

Data: 2024.07.04 Altitude : 73.55 m

Inž. geologinio sluoksnio Nr.	Grunto aprašymas pagal LST EN ISO 14688-1:2018 ir LGT direktoriaus įsakymą Nr. 1-175 (2019 m)	Sluoksnio gylis	Altitude	Sluoksnio storis	Stulpelis	Vandens lygis: Pasirodo	Vandens lygis: Nusist.	Vandens lygis: Maks.	Pagal CPT duomenis: qc (MPa)	Pagal CPT duomenis: Eo (MPa)	Pagal CPT duomenis: Vidaus tr. laipsnialis
	~~Dirvožemis~~	~~0.1~~	~~73.45~~	0.1				0.10 73.45			
1	Supiltas gruntas: molingas gruntas su statybinio laužo priemaiša, Mg	1.0	72.55	0.9					2.4	2.4	–
2	Smėlingas mažo plastiškumo molis, saClL, rudas-margas (sluoksniuotas),su smėlio lęšiais, vidutinio stiprumo	1.6	71.95	0.6					2.3	15	–
5	Smėlingas mažo plastiškumo molis, moreninis, saClL, rudas-tamsiai rudas, stiprus	12.0	61.55	10.4			Nesutiktas		4.0 3.2 2.7 4.0 2.8	36 30 26 36 27	– – – – –

CPT Nr. 15

Data : 2024.07.04 Altitude : 73.55 m

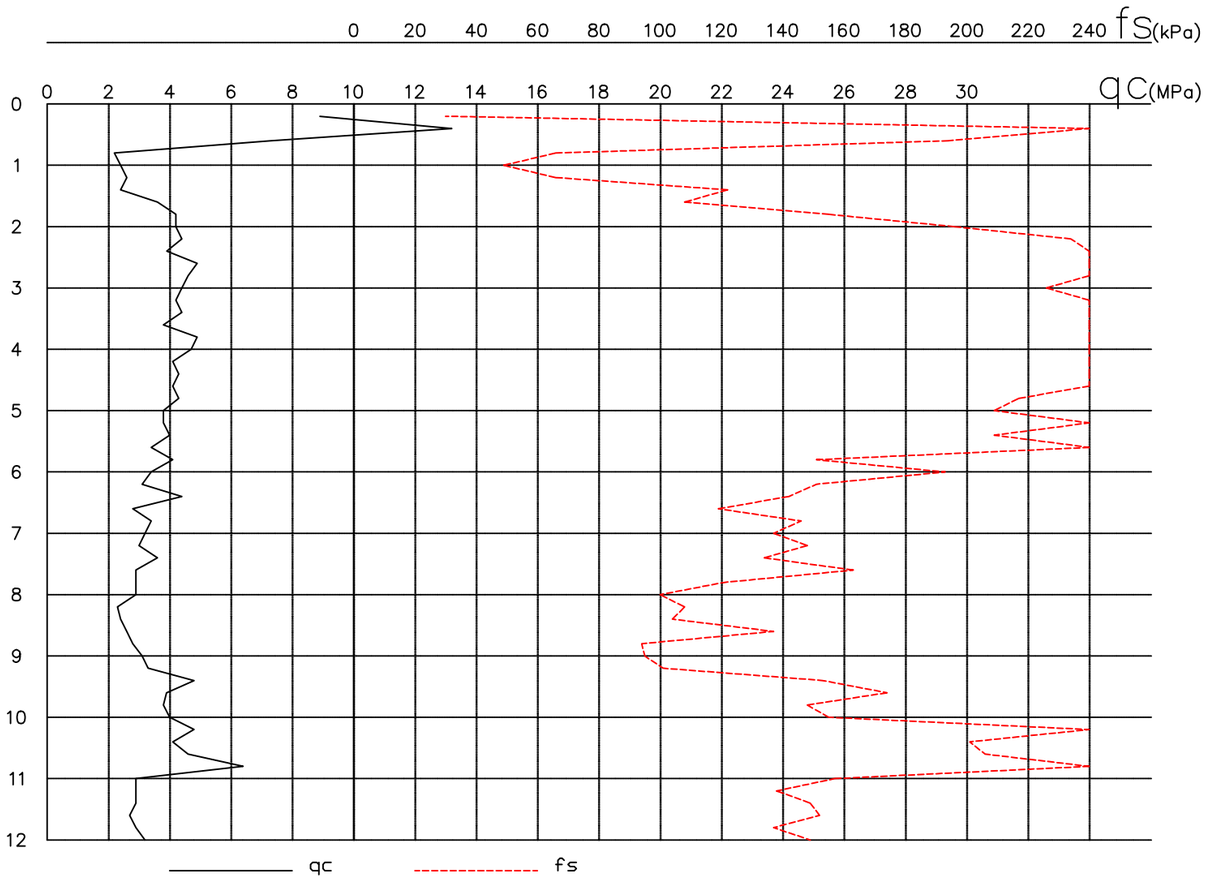

Rapasta	LGT leidimo Nr. 30 Gedimino g. 47-217 LT - 44242, Kaunas info@rapasta.lt	OBJEKTAS : Universalaus sporto paskirties inžinierinių statinių (11.) komplekso Veiverių pl. 132, Kauno m., statybos projektas
PAREIGOS	PAVARDĖ / PARAŠAS	BRĖŽINYS : Gręžinio Nr. 15 stulpelis ir statinio zondavimo (CPT) grafikas
Lauko darbų geologas	A. Motūza	
Brėžinį paruošė inž. geologas	E. Belozaras	
	Data 2024 07	

Gr. Nr. 16

Data: 2024.07.05 Altitude : 73.75 m

Inž. geologinio sluoksnio Nr.	Grunto aprašymas pagal LST EN ISO 14688-1:2018 ir LGT direktoriaus įsakymą Nr. 1-175 (2019 m)	Sluoksnio gylis	Altitude	Sluoksnio storis	Stulpelis	Vandens lygis: Pasirodo	Nusist.	Maks.	Pagal CPT duomenis: qc (MPa)	Eo (MPa)	Vidaus tr. laipsniais
	Dirvožemis	0.1	73.65	0.1				0.10			
1	Supiltas gruntas: smėlingas gruntas su dirvožemiu, Mg	0.4	73.35	0.3				73.65	4.0	4	–
3	Smėlingas mažo plastiškumo molis, saClL, rudas-margas (sluoksniuotas), su smėlio lęšiais, stiprus	1.4	72.35	1.0					2.6	18	–
5	Smėlingas mažo plastiškumo molis, moreninis, saClL, rudas-tamsiai rudas, stiprus	6.0	67.75	4.6		Nesutiktas			2.6	25	–
									3.7	34	–
									2.8	27	–

CPT Nr. 16

Data : 2024.07.05 Altitude : 73.75 m

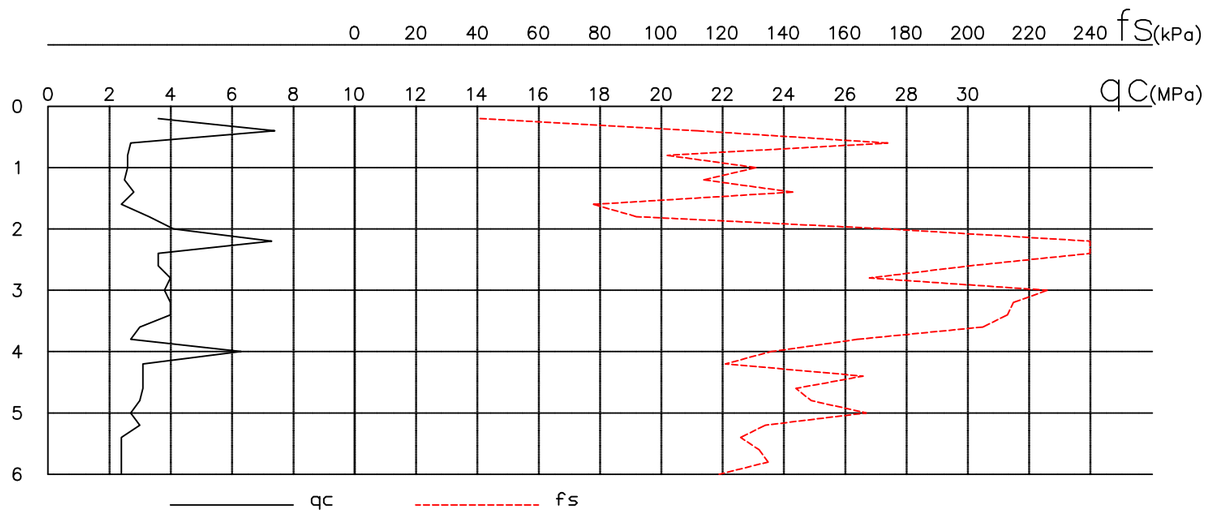

Gr. Nr. 17

Data: 2024.07.08 Altitude : 74.35 m

Inž. geologinio sluoksnio Nr.	Grunto aprašymas pagal LST EN ISO 14688-1:2018 ir LGT direktoriaus įsakymą Nr. 1-175 (2019 m)	Sluoksnio gylis	Altitude	Sluoksnio storis	Stulpelis	Vandens lygis: Pasirodo	Nusist.	Maks.	Pagal CPT duomenis: qc (MPa)	Eo (MPa)	Vidaus tr. laipsniais
	Dirvožemis	0.2	74.15	0.2				0.20			
1	Supiltas gruntas: molingas gruntas su dirvožemio, priemaiša, Mg	0.5	73.85	0.3				74.15	2.3	2.3	–
2	Smėlingas mažo plastiškumo molis, saClL, rudas (sluoksniuotas), su smėlio lęšiais, vidutinio stiprumo	2.2	72.15	1.7					2.2	15	–
5	Smėlingas mažo plastiškumo molis, moreninis, saClL, rudas-tamsiai rudas, stiprus	6.0	68.35	3.8		Nesutiktas			3.0	29	–
									3.8	34	–

CPT Nr. 17

Data : 2024.07.08 Altitude : 74.35 m

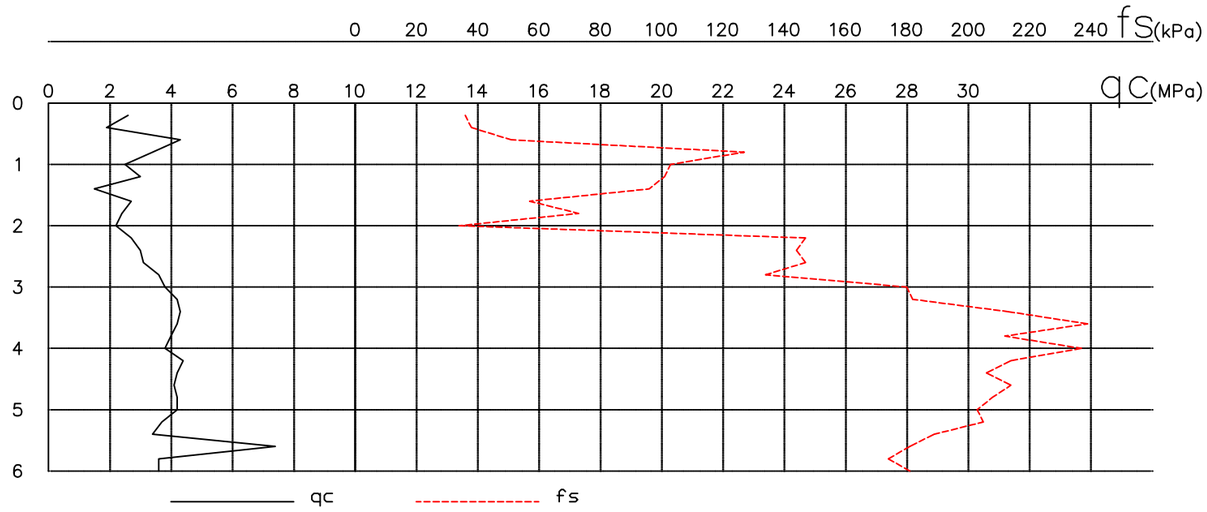

SUTARTINIAI ŽENKLAI

▲ — Grunto bandinys (suardytos struktūros)

▦ — Grunto bandinys (nesuardytos struktūros)

Rapasta

LGT leidimo Nr. 30
Gedimino g. 47-217
LT - 44242, Kaunas
info@rapasta.lt

OBJEKTAS : Universalaus sporto paskirties inžinierinių statinių (11.) komplekso Veiverių pl. 132, Kauno m., statybos projektas

PAREIGOS	PAVARDĖ	PARAŠAS
Lauko darbų geologas	A. Motūza	
Brėžinį paruošė inž. geologas	E. Belozaras	
	Data	2024 07

BRĖŽINYS : Gręžinių Nr. 16, 17 stulpeliai ir statinio zondavimo (CPT) grafikai

Gr. Nr. 18

Data: 2024.07.08 Altitude : 74.05 m

Inž. geologinio sluoksnio Nr.	Grunto aprašymas pagal LST EN ISO 14688-1:2018 ir LGT direktoriaus įsakymą Nr. 1-175 (2019 m)	Sluoksnio gylis	Altitude	Sluoksnio storis	Stulpelis	Vandens lygis: Pasirodo	Vandens lygis: Nusist.	Vandens lygis: Maks.	Pagal CPT duomenis: qc (MPa)	Eo (MPa)	Vidaus tr. laipsnis
	Dirvožemis	0.1	73.95	0.1				0.10 73.95			
	Supiltas gruntas: smėlingas-žvyringas gruntas su dirvožemiu, Mg	0.5	73.55	0.4					14.0	14	–
1	Supiltas gruntas: molingas gruntas su dirvožemio priemaiša, Mg	2.0	72.05	1.5					1.2	1.2	–
2	Smėlingas mažo plastiškumo molis, saCIL, rudas-margas (sluoksniuotas),su smėlio lęšiais, vidutinio stiprumo	2.4	71.65	0.4					1.6	11	–
5	Smėlingas mažo plastiškumo molis, moreninis, saCIL, rudas-tamsiai rudas, stiprus	4.4	69.65	2.0					2.9	28	–
4	Smėlingas mažo plastiškumo molis, moreninis, saCIL, rudas-tamsiai rudas, vidutinio stiprumo	6.3	67.75	1.9			Nesutiktas		2.3	23	–
5	Smėlingas mažo plastiškumo molis, moreninis, saCIL, rudas-tamsiai rudas, stiprus	12.0	62.05						2.7	26	–
									3.1	29	–

CPT Nr. 18

Data : 2024.07.08 Altitude : 74.05 m

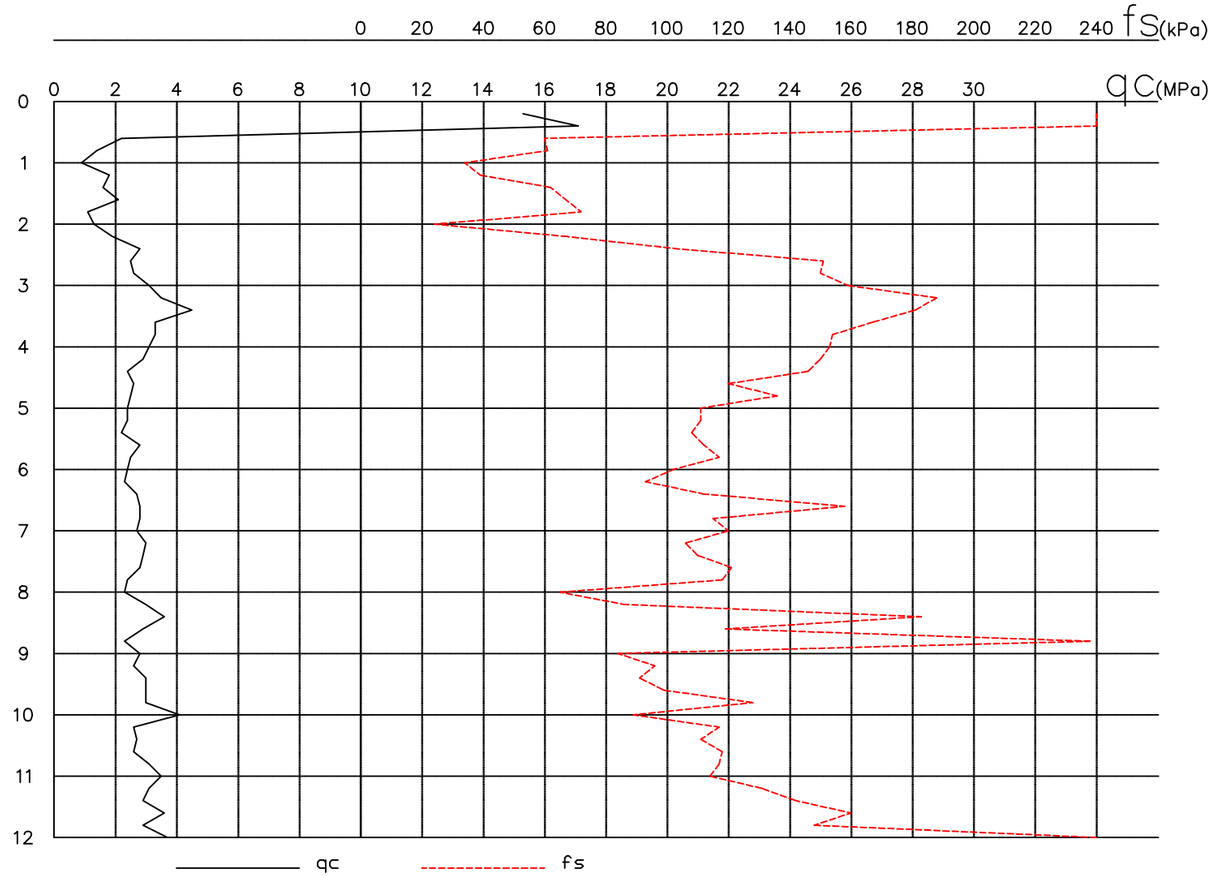

SUTARTINIAI ŽENKLAI

▲ — Grunto bandinys (suardytos struktūros)

▦ — Grunto bandinys (nesuardytos struktūros)

Rapasta

LGT leidimo Nr. 30
Gedimino g. 47-217
LT - 44242, Kaunas
info@rapasta.lt

OBJEKTAS : Universalaus sporto paskirties inžinierinių statinių (11.) komplekso Veiverių pl. 132, Kauno m., statybos projektas

PAREIGOS	PAVARDĖ	PARAŠAS
Lauko darbų geologas	A. Motūza	
Brėžinį paruošė inž. geologas	E. Belozaras	
	Data	2024 07

BRĖŽINYS : Gręžinio Nr. 18 stulpelis ir statinio zondavimo (CPT) grafikas

Gr. Nr. 19

Data: 2024.07.08 Altitude : 73.65 m

Inž. geologinio sluoksnio Nr.	Grunto aprašymas pagal LST EN ISO 14688-1:2018 ir LGT direktoriaus įsakymą Nr. 1-175 (2019 m)	Sluoksnio gylis	Altitude	Sluoksnio storis	Stulpelis	Vandens lygis: Pasirodo	Vandens lygis: Nusist.	Vandens lygis: Maks.	Pagal CPT duomenis: qc (MPa)	Pagal CPT duomenis: Eo (MPa)	Pagal CPT duomenis: Vidaus tr. laipsnis
	~~Dirvožemis~~	~~0.1~~	~~73.55~~	0.1				0.10 73.55			
1	Supiltas gruntas: smėlingas, žvyringas ir molingas gruntas su organinės medžiagos priemaiša, Mg.	1.3	72.35	1.2					1.5	1.5	–
2	Smėlingas mažo plastiškumo molis, saCIL, rudas-margas (sluoksniuotas),su smėlio lęšiais, vidutinio stiprumo	1.8	71.85	0.5					1.7	11	–
									3.0	29	–
									4.0	36	–
5	Smėlingas mažo plastiškumo molis, moreninis, saCIL, rudas-tamsiai rudas, stiprus			10.2					2.9	28	–
									2.6	25	–
		12.0	61.65								

Nesutiktas

CPT Nr. 19

Data : 2024.07.08 Altitude : 73.65 m

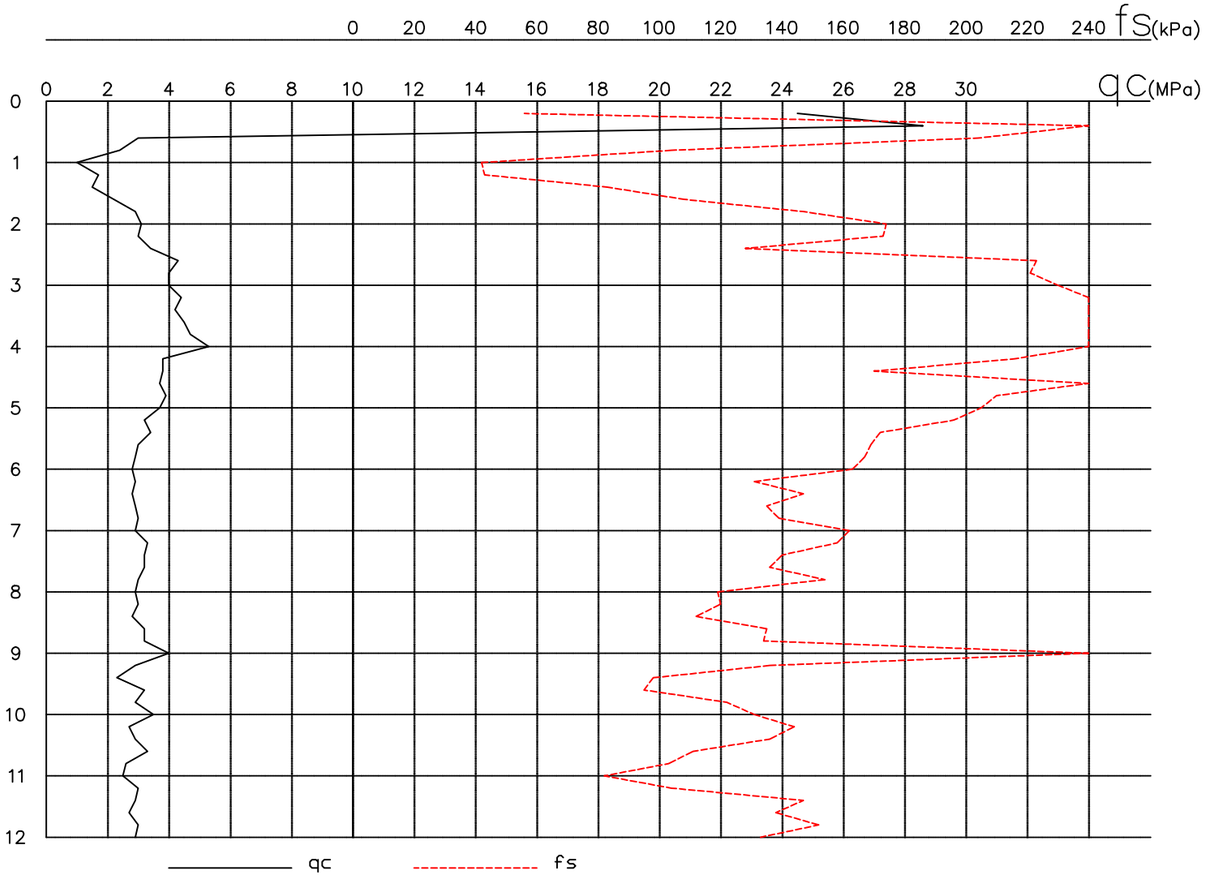

SUTARTINIAI ŽENKLAI

▲ — Grunto bandinys (suardytos struktūros)
▦ — Grunto bandinys (nesuardytos struktūros)

Rapasta	LGT leidimo Nr. 30 Gedimino g. 47-217 LT - 44242, Kaunas info@rapasta.lt	OBJEKTAS : Universalaus sporto paskirties inžinierinių statinių (11.) komplekso Veiverių pl. 132, Kauno m., statybos projektas
PAREIGOS	PAVARDĖ	PARAŠAS
Lauko darbų geologas	A. Motūza	
Brėžinį paruošė inž. geologas	E. Belozaras	BRĖŽINYS : Gręžinio Nr. 19 stulpelis ir statinio zondavimo (CPT) grafikas
	Data 2024 07	

Inžinerinis geologinis pjūvis I-I
(Mv 1:100 Mh 1:1000)

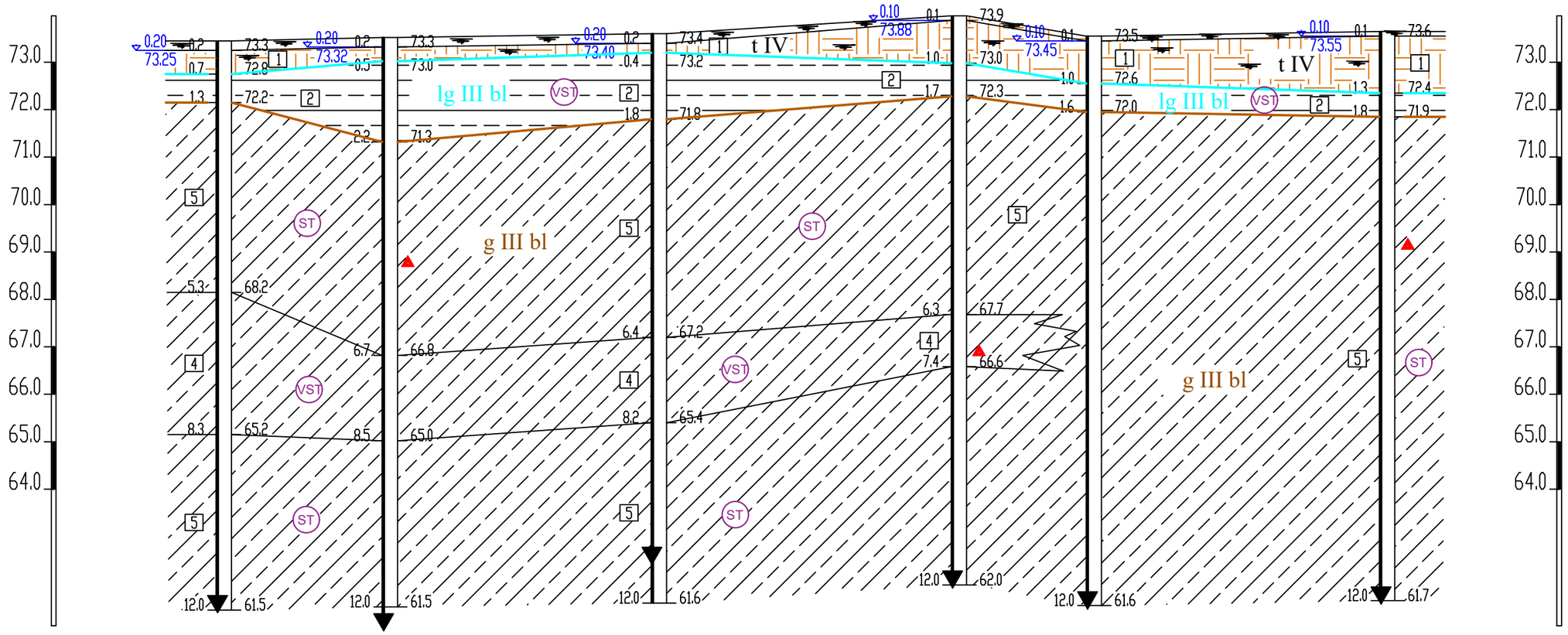

Tasko Nr.	Gr.CPT-1	Gr.CPT-4	Gr.CPT-7	Gr.CPT-9	Gr.CPT-15	Gr.CPT-19
Altitude , m	73.45	73.52	73.60	73.98	73.55	73.65
Atstumas , m	35.00	56.72	63.29	28.44	61.85	

Gruntai suskirstyti pagal stiprumą remiantis projektinių inžinerinių geologinių ir geotechninių tyrimų rekomendacijų 5 priedu:

Smulkūs gruntai: (moliai ir dulkiai)
qc: <0,50 MPa, labai silpni
qc: 0,50 - 1,00 MPa, silpni
qc: 1,00 - 2,50 MPa, vidutinio stiprumo
qc: 2,50 - 4,00 MPa, stiprūs
qc: >4,00 MPa, labai stiprūs

Rupūs gruntai (smėliai, žvyrai)
qc: 0,00 -2,50 MPa,labai purūs (labai silpni)
qc: 2,50 - 5,00 MPa, purūs (silpni)
qc: 5,00 - 10,00 MPa, vidutinio tankumo (vidutinio stiprumo)
qc: 10,00 - 20,00 MPa, tankūs (stiprūs)
qc: >20,00 MPa, labai tankūs (labai stiprūs)

VST Vidutinio stiprumo
ST Stiprus

Inžinerinio geologinio sluoksnio riba

genetinio tipo riba

Geologinių sluoksnių (IGS) Nr.
2

Genetinis indeksas
lg III bl — Limnoglacialinės nuogulos

▲ — Grunto bandinys (suardytos struktūros)
■ — Grunto bandinys (nesuardytos struktūros)
● — Požeminio vandens mėginys

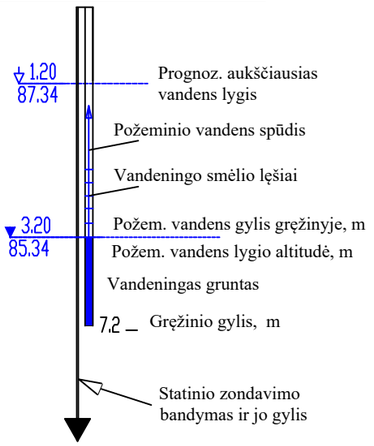

Rapasta

LGT leidimo Nr. 30
Gedimino g. 47-217
LT - 44242, Kaunas
info@rapasta.lt

OBJEKTAS : Universalaus sporto paskirties inžinierinių statinių (11.) komplekso Veiverių pl. 132, Kauno m., statybos projektas

PAREIGOS	PAVARDĖ	PARAŠAS
Lauko darbų geologas	A. Motūza	
Brėžinį paruošė inž. geologas	E. Belozaras	
	Data	2024 07

BRĖŽINYS : Inžinerinis geologinis pjūvis I-I ir sutartiniai ženklai

Inžinerinis geologinis pjūvis II-II
(Mv 1:100 Mh 1:1000)

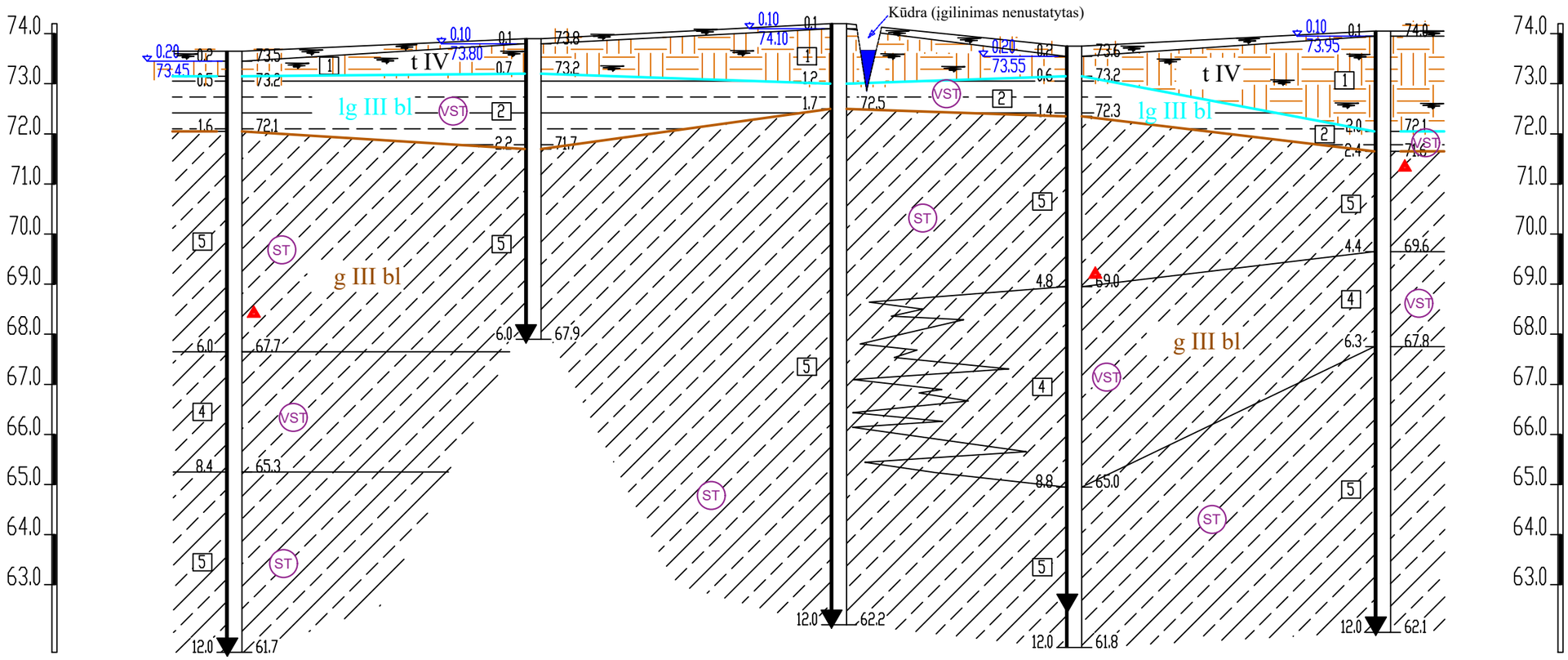

Tasko Nr.	Gr.CPT-5		Gr.CPT-8		Gr.CPT-11		Gr.CPT-14		Gr.CPT-18	
Altitude , m	73.65		73.90		74.20		73.75		74.05	
Atstumas , m		59.77		61.03		47.01		61.72		

Gruntai suskirstyti pagal stiprumą remiantis projektinių inžinerinių geologinių ir geotechninių tyrimų rekomendacijų 5 priedu:

Smulkūs gruntai: (moliai ir dulkiai)
qc: <0,50 MPa, labai silpni
qc: 0,50 - 1,00 MPa, silpni
qc: 1,00 - 2,50 MPa, vidutinio stiprumo
qc: 2,50 - 4,00 MPa, stiprūs
qc: >4,00 MPa, labai stiprūs

Rupūs gruntai (smėliai, žvyrai)
qc: 0,00 -2,50 MPa,labai purūs (labai silpni)
qc: 2,50 - 5,00 MPa, purūs (silpni)
qc: 5,00 - 10,00 MPa, vidutinio tankumo (vidutinio stiprumo)
qc: 10,00 - 20,00 MPa, tankūs (stiprūs)
qc: >20,00 MPa, labai tankūs (labai stiprūs)

(VST) Vidutinio stiprumo
(ST) Stiprus

Inžinerinio geologinio sluoksnio riba

genetinio tipo riba

Geologinių sluoksnių (IGS) Nr. [2]

Genetinis indeksas
lg III bl — Limnoglacialinės nuogulos

▲ — Grunto bandinys (suardytos struktūros)
■ — Grunto bandinys (nesuardytos struktūros)
● — Požeminio vandens mėginys

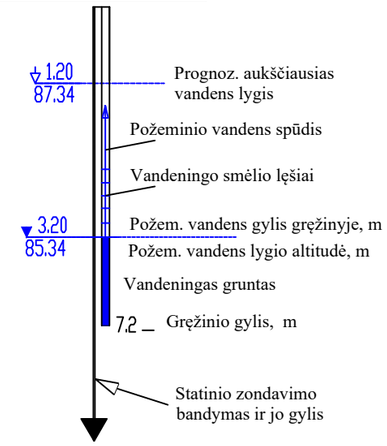

Rapasta	LGT leidimo Nr. 30 Gedimino g. 47-217 LT - 44242, Kaunas info@rapasta.lt	OBJEKTAS : Universalaus sporto paskirties inžinierinių statinių (11.) komplekso Veiverių pl. 132, Kauno m., statybos projektas
PAREIGOS	PAVARDĖ	PARAŠAS
Lauko darbų geologas	A. Motūza	
Brėžinį paruošė inž. geologas	E. Belozaras	BRĖŽINYS : Inžinerinis geologinis pjūvis II-II ir sutartiniai ženklai
	Data 2024 07	

Inžinerinis geologinis pjūvis III-III
(Mv 1:100 Mh 1:1000)

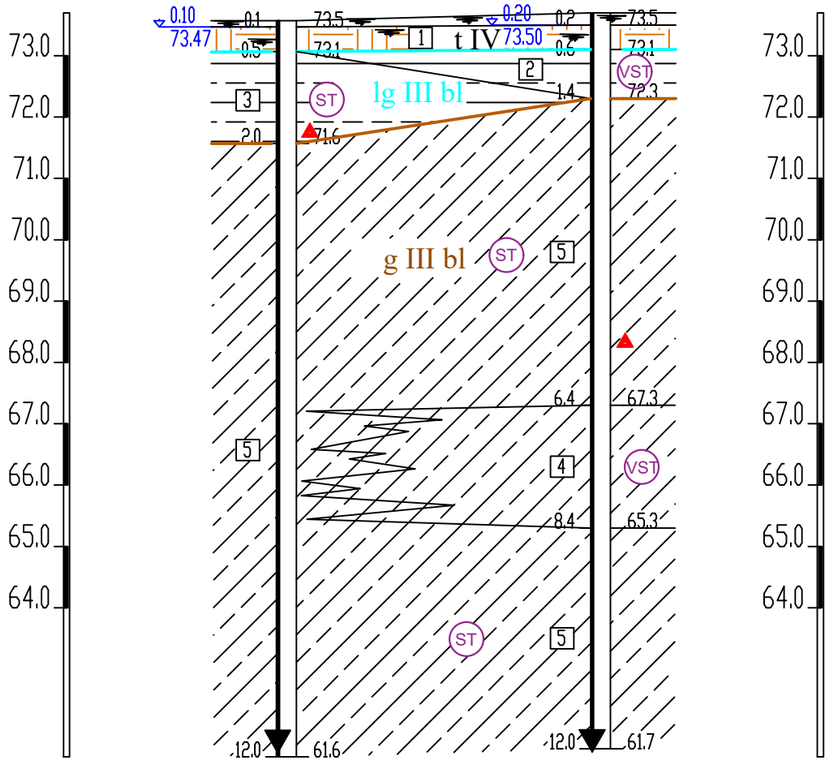

Tasko Nr.	Gr.CPT-2		Gr.CPT-6
Altitude , m	73.57		73.70
Atstumas , m		51.24	

Inžinerinis geologinis pjūvis IV-IV
(Mv 1:100 Mh 1:1000)

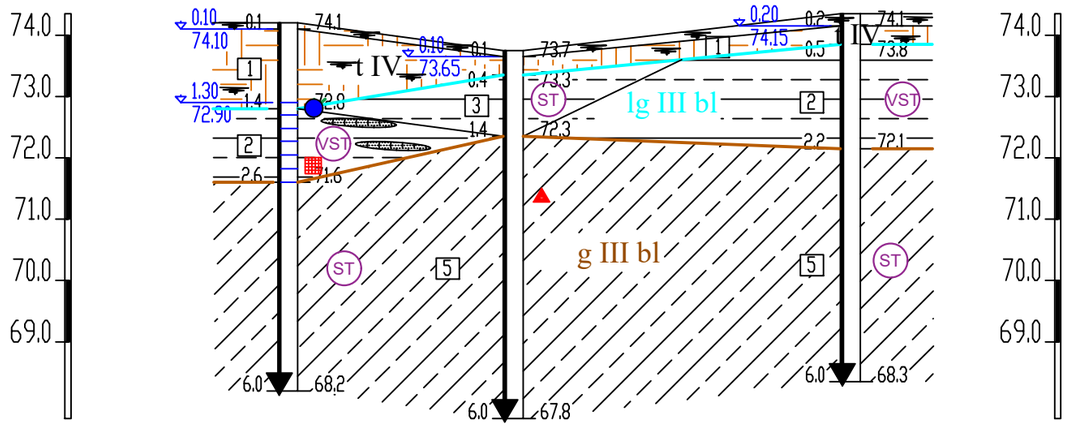

Tasko Nr.	Gr.CPT-13		Gr.CPT-16		Gr.CPT-17
Altitude , m	74.20		73.75		74.35
Atstumas , m		36.77		55.00	

Gruntai suskirstyti pagal stiprumą remiantis projektinių inžinerinių geologinių ir geotechninių tyrimų rekomendacijų 5 priedu:

Smulkūs gruntai: (moliai ir dulkiai)
qc: <0,50 MPa, labai silpni
qc: 0,50 - 1,00 MPa, silpni
qc: 1,00 - 2,50 MPa, vidutinio stiprumo
qc: 2,50 - 4,00 MPa, stiprūs
qc: >4,00 MPa, labai stiprūs

Rupūs gruntai (smėliai, žvyrai)
qc: 0,00 -2,50 MPa,labai purūs (labai silpni)
qc: 2,50 - 5,00 MPa, purūs (silpni)
qc: 5,00 - 10,00 MPa, vidutinio tankumo (vidutinio stiprumo)
qc: 10,00 - 20,00 MPa, tankūs (stiprūs)
qc: >20,00 MPa, labai tankūs (labai stiprūs)

VST Vidutinio stiprumo
ST Stiprus

Inžinerinio geologinio sluoksnio riba

genetinio tipo riba

Geologinių sluoksnių (IGS) Nr.
[2]

Genetinis indeksas
lg III bl — Limnoglacialinės nuogulos
▲ — Grunto bandinys (suardytos struktūros)
■ — Grunto bandinys (nesuardytos struktūros)
● — Požeminio vandens mėginys

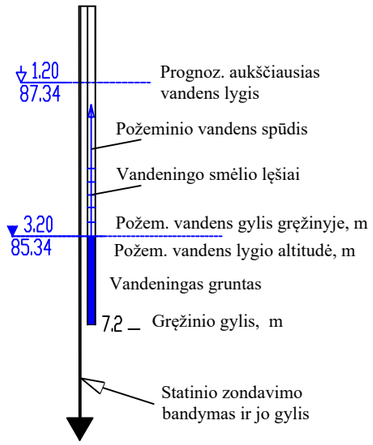

Rapasta

LGT leidimo Nr. 30
Gedimino g. 47-217
LT - 44242, Kaunas
info@rapasta.lt

OBJEKTAS : Universalaus sporto paskirties inžinierinių statinių (11.) komplekso Veiverių pl. 132, Kauno m., statybos projektas

PAREIGOS	PAVARDĖ	PARAŠAS
Lauko darbų geologas	A. Motūza	
Brėžinį paruošė inž. geologas	E. Belozaras	
	Data	2024 07

BRĖŽINYS : Inžineriniai geologiniai pjūviai III-III, IV-IV ir sutartiniai ženklai

Inžinerinis geologinis pjūvis V-V
(Mv 1:100 Mh 1:1000)

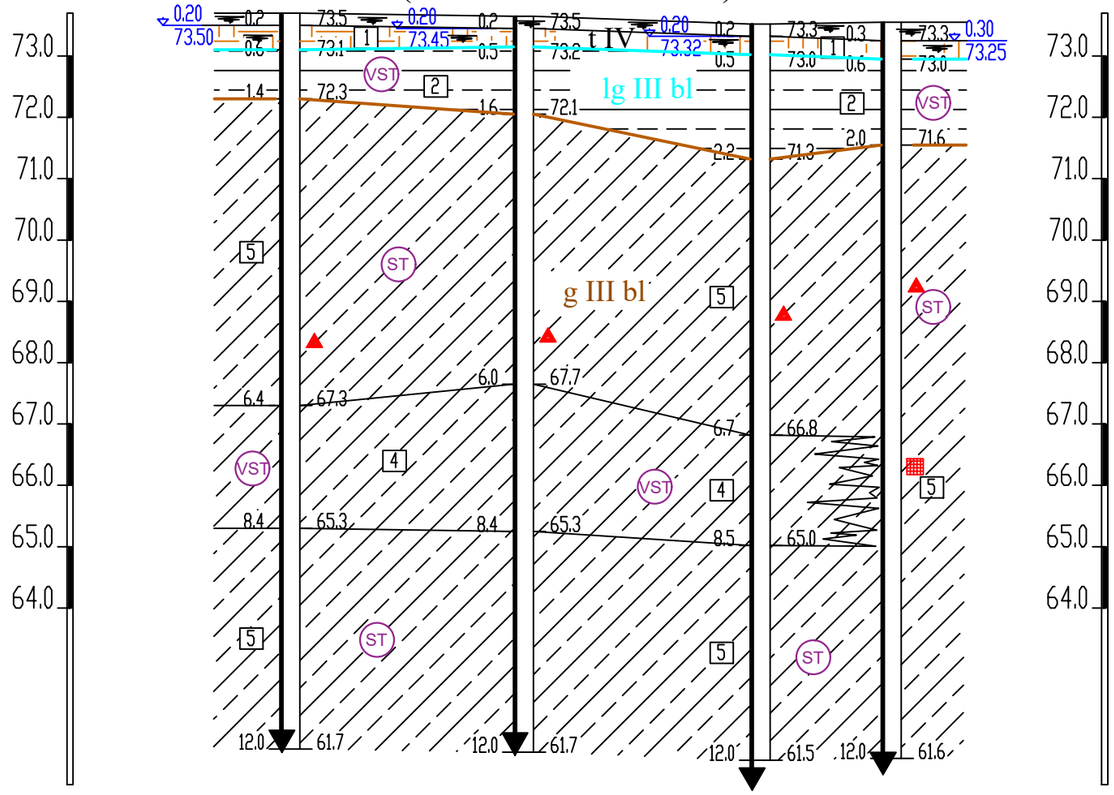

Tasko Nr.	Gr.CPT-6	Gr.CPT-5	Gr.CPT-4	Gr.CPT-3
Altitude , m	73.70	73.65	73.52	73.55
Atstumas , m	38.08	38.63	21.38	

Inžinerinis geologinis pjūvis VI-VI
(Mv 1:100 Mh 1:1000)

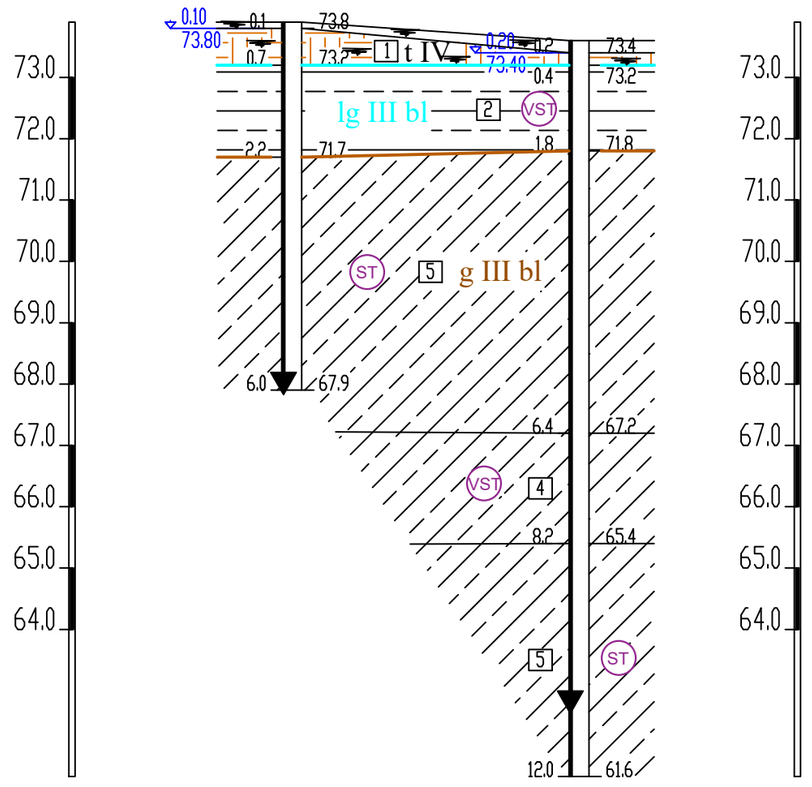

Tasko Nr.	Gr.CPT-8	Gr.CPT-7
Altitude , m	73.90	73.60
Atstumas , m	46.84	

Gruntai suskirstyti pagal stiprumą remiantis projektinių inžinerinių geologinių ir geotechninių tyrimų rekomendacijų 5 priedu:

Smulkūs gruntai: (moliai ir dulkiai)
qc: <0,50 MPa, labai silpni
qc: 0,50 - 1,00 MPa, silpni
qc: 1,00 - 2,50 MPa, vidutinio stiprumo
qc: 2,50 - 4,00 MPa, stiprūs
qc: >4,00 MPa, labai stiprūs

Rupūs gruntai (smėliai, žvyrai)
qc: 0,00 -2,50 MPa,labai purūs (labai silpni)
qc: 2,50 - 5,00 MPa, purūs (silpni)
qc: 5,00 - 10,00 MPa, vidutinio tankumo (vidutinio stiprumo)
qc: 10,00 - 20,00 MPa, tankūs (stiprūs)
qc: >20,00 MPa, labai tankūs (labai stiprūs)

(VST) Vidutinio stiprumo
(ST) Stiprus

Inžinerinio geologinio sluoksnio riba

genetinio tipo riba

Geologinių sluoksnių (IGS) Nr.
[2]

Genetinis indeksas

lg III bl — Limnoglacialinės nuogulos

▲ — Grunto bandinys (suardytos struktūros)
■ — Grunto bandinys (nesuardytos struktūros)
● — Požeminio vandens mėginys

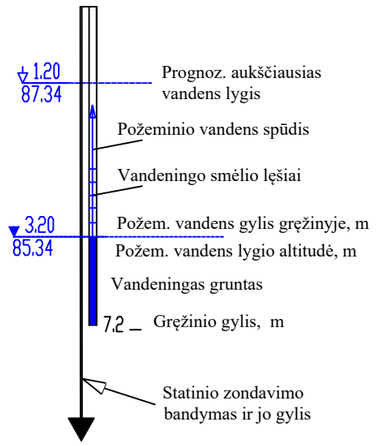

Rapasta

LGT leidimo Nr. 30
Gedimino g. 47-217
LT - 44242, Kaunas
info@rapasta.lt

PAREIGOS	PAVARDĖ	PARAŠAS
Lauko darbų geologas	A. Motūza	
Brėžinį paruošė inž. geologas	E. Belozaras	
	Data	2024 07

OBJEKTAS : Universalaus sporto paskirties inžinerinių statinių (11.) komplekso Veiverių pl. 132, Kauno m., statybos projektas

BRĖŽINYS : Inžineriniai geologiniai pjūviai V-V, VI-VI ir sutartiniai ženklai

Inžinerinis geologinis pjūvis VII-VII
(Mv 1:100 Mh 1:1000)

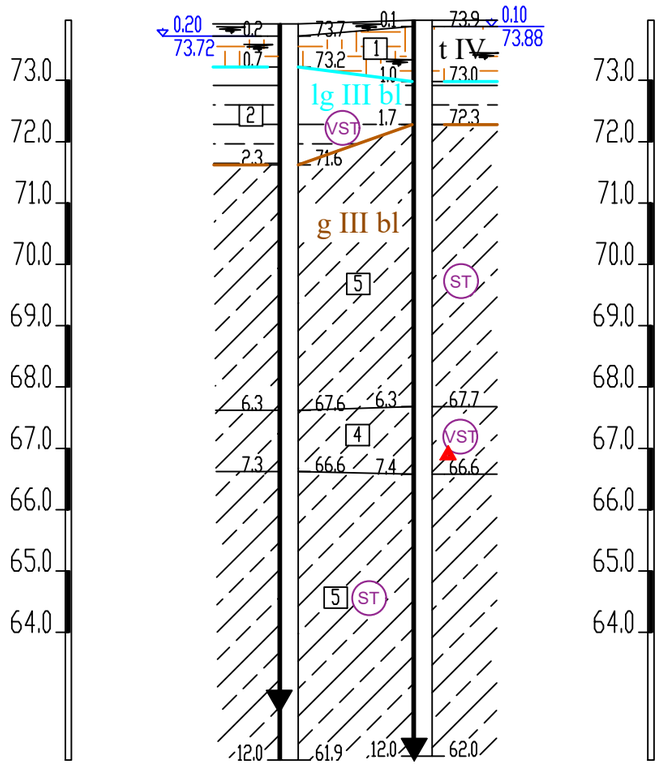

Tasko Nr.	Gr.CPT-10	Gr.CPT-9
Altitude , m	73.92	73.98
Atstumas , m	21.84	

Inžinerinis geologinis pjūvis VIII-VIII
(Mv 1:100 Mh 1:1000)

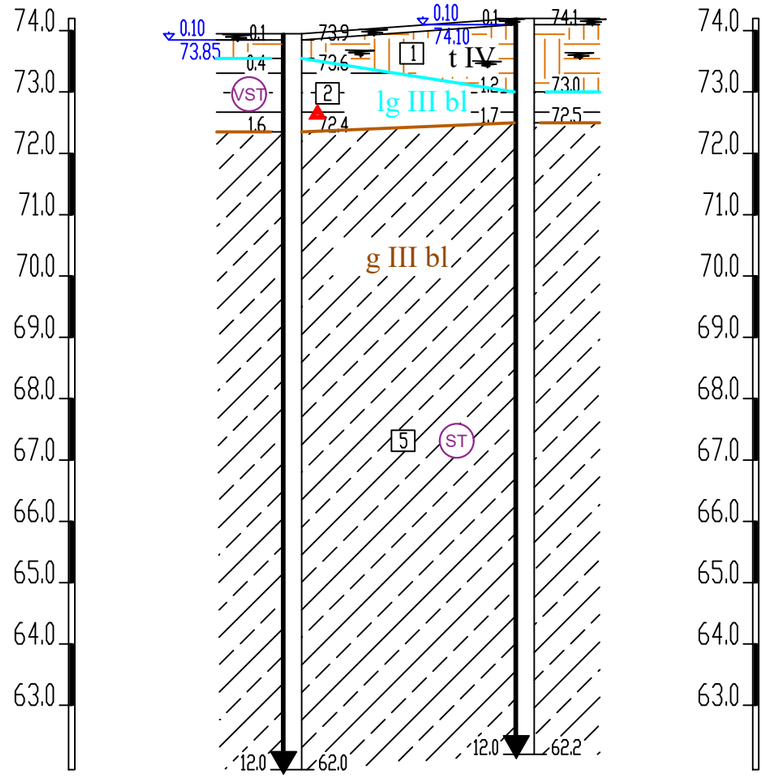

Tasko Nr.	Gr.CPT-12	Gr.CPT-11
Altitude , m	73.95	74.20
Atstumas , m	37.95	

Gruntai suskirstyti pagal stiprumą remiantis projektinių inžinerinių geologinių ir geotechninių tyrimų rekomendacijų 5 priedu:

Smulkūs gruntai: (moliai ir dulkiai)
qc: <0,50 MPa, labai silpni
qc: 0,50 - 1,00 MPa, silpni
qc: 1,00 - 2,50 MPa, vidutinio stiprumo
qc: 2,50 - 4,00 MPa, stiprūs
qc: >4,00 MPa, labai stiprūs

Rupūs gruntai (smėliai, žvyrai)
qc: 0,00 -2,50 MPa,labai purūs (labai silpni)
qc: 2,50 - 5,00 MPa, purūs (silpni)
qc: 5,00 - 10,00 MPa, vidutinio tankumo (vidutinio stiprumo)
qc: 10,00 - 20,00 MPa, tankūs (stiprūs)
qc: >20,00 MPa, labai tankūs (labai stiprūs)

(VST) Vidutinio stiprumo
(ST) Stiprus

Inžinerinio geologinio sluoksnio riba

genetinio tipo riba

Geologinių sluoksnių (IGS) Nr.
[2]

Genetinis indeksas

lg III bl — Limnoglacialinės nuogulos

▲ — Grunto bandinys (suardytos struktūros)
■ — Grunto bandinys (nesuardytos struktūros)
● — Požeminio vandens mėginys

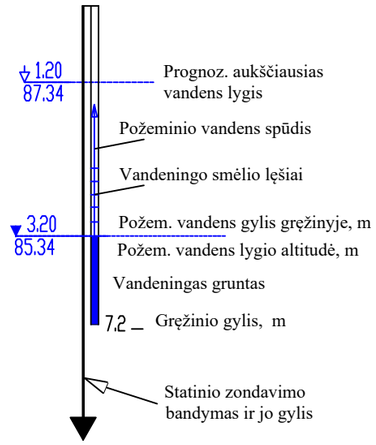

Rapasta

LGT leidimo Nr. 30
Gedimino g. 47-217
LT - 44242, Kaunas
info@rapasta.lt

OBJEKTAS : Universalaus sporto paskirties inžinierinių statinių (11.) komplekso Veiverių pl. 132, Kauno m., statybos projektas

PAREIGOS	PAVARDĖ	PARAŠAS
Lauko darbų geologas	A. Motūza	
Brėžinį paruošė inž. geologas	E. Belozaras	
	Data	2024 07

BRĖŽINYS : Inžineriniai geologiniai pjūviai VII-VII, VIII-VIII ir sutartiniai ženklai

Inžinerinis geologinis pjūvis IX-IX
(Mv 1:100 Mh 1:1000)

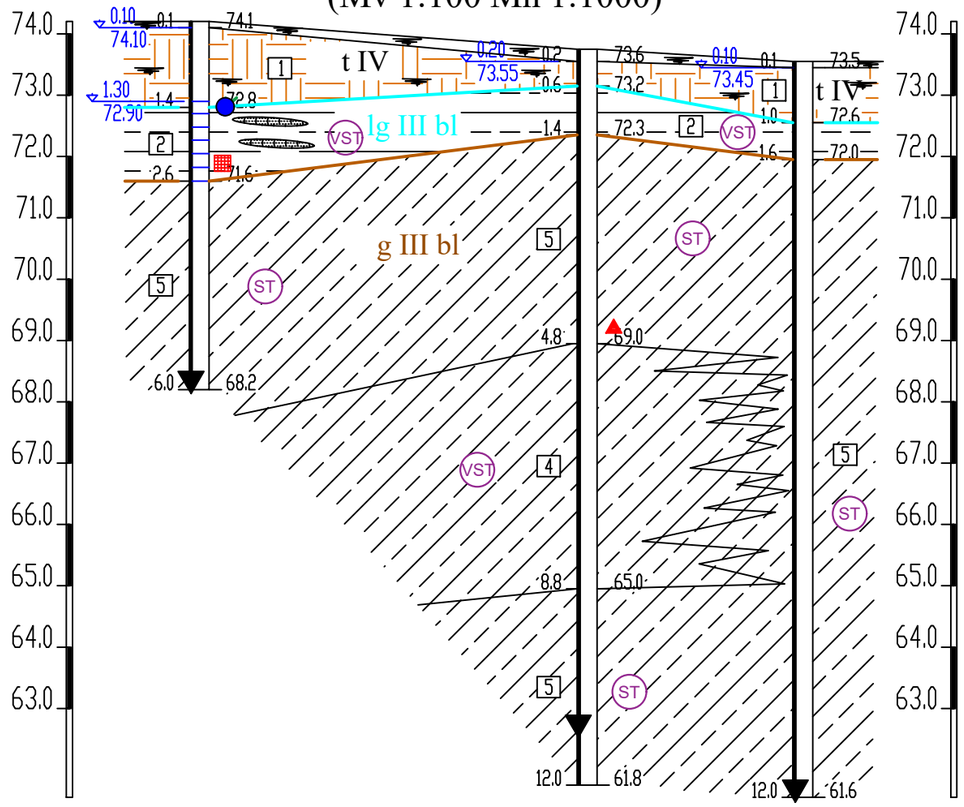

Tasko Nr.	Gr.CPT-13	Gr.CPT-14	Gr.CPT-15
Altitude , m	74.20	73.75	73.55
Atstumas , m	63.29	35.17	

Inžinerinis geologinis pjūvis X-X
(Mv 1:100 Mh 1:1000)

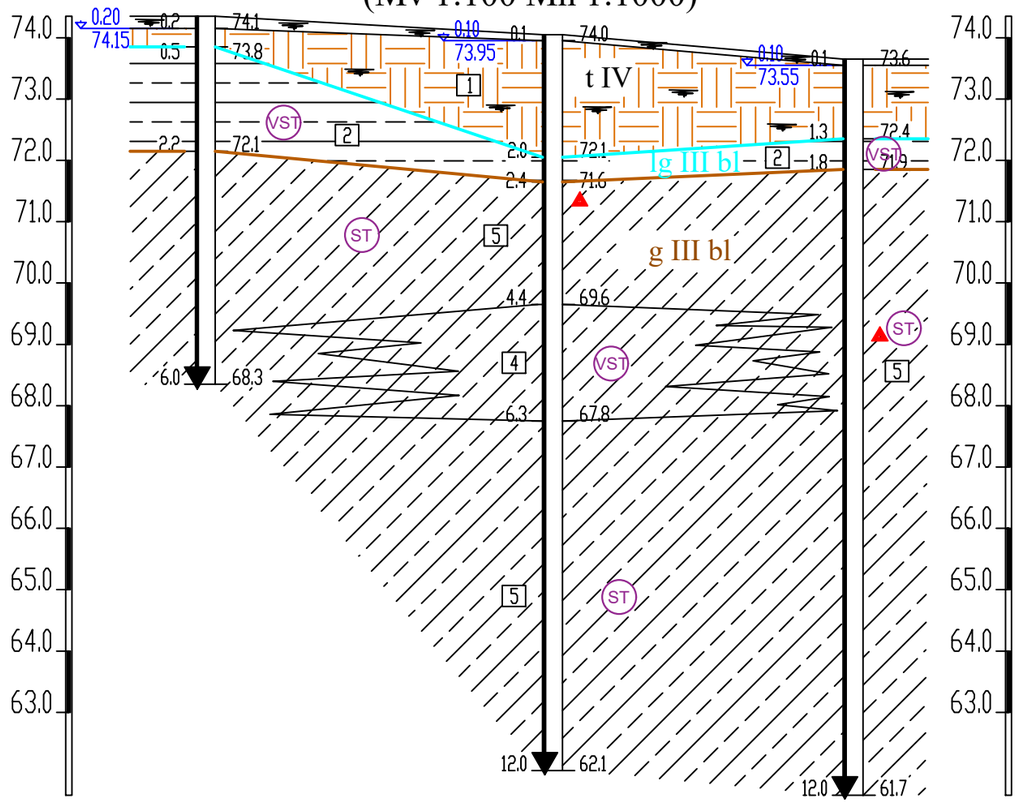

Tasko Nr.	Gr.CPT-17	Gr.CPT-18	Gr.CPT-19
Altitude , m	74.35	74.05	73.65
Atstumas , m	56.61	49.04	

Gruntai suskirstyti pagal stiprumą remiantis projektinių inžinerinių geologinių ir geotechninių tyrimų rekomendacijų 5 priedu:

Smulkūs gruntai: (moliai ir dulkiai)
qc: <0,50 MPa, labai silpni
qc: 0,50 - 1,00 MPa, silpni
qc: 1,00 - 2,50 MPa, vidutinio stiprumo
qc: 2,50 - 4,00 MPa, stiprūs
qc: >4,00 MPa, labai stiprūs

Rupūs gruntai (smėliai, žvyrai)
qc: 0,00 -2,50 MPa,labai purūs (labai silpni)
qc: 2,50 - 5,00 MPa, purūs (silpni)
qc: 5,00 - 10,00 MPa, vidutinio tankumo (vidutinio stiprumo)
qc: 10,00 - 20,00 MPa, tankūs (stiprūs)
qc: >20,00 MPa, labai tankūs (labai stiprūs)

(VST) Vidutinio stiprumo
(ST) Stiprus

Inžinerinio geologinio sluoksnio riba

genetinio tipo riba

Geologinių sluoksnių (IGS) Nr.
[2]

Genetinis indeksas
lg III bl — Limnoglacialinės nuogulos
▲ — Grunto bandinys (suardytos struktūros)
■ — Grunto bandinys (nesuardytos struktūros)
● — Požeminio vandens mėginys

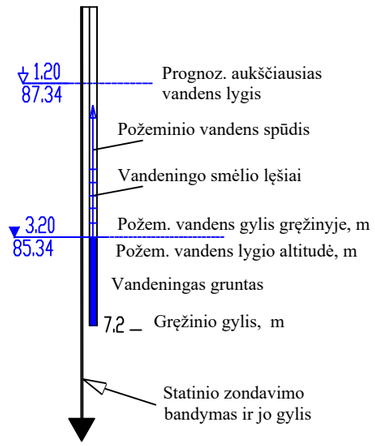

Rapasta

LGT leidimo Nr. 30
Gedimino g. 47-217
LT - 44242, Kaunas
info@rapasta.lt

OBJEKTAS : Universalaus sporto paskirties inžinierinių statinių (11.) komplekso Veiverių pl. 132, Kauno m., statybos projektas

PAREIGOS	PAVARDĖ	PARAŠAS
Lauko darbų geologas	A. Motūza	
Brėžinį paruošė inž. geologas	E. Belozaras	
	Data 2024 07	

BRĖŽINYS : Inžineriniai geologiniai pjūviai IX-IX, X-X ir sutartiniai ženklai

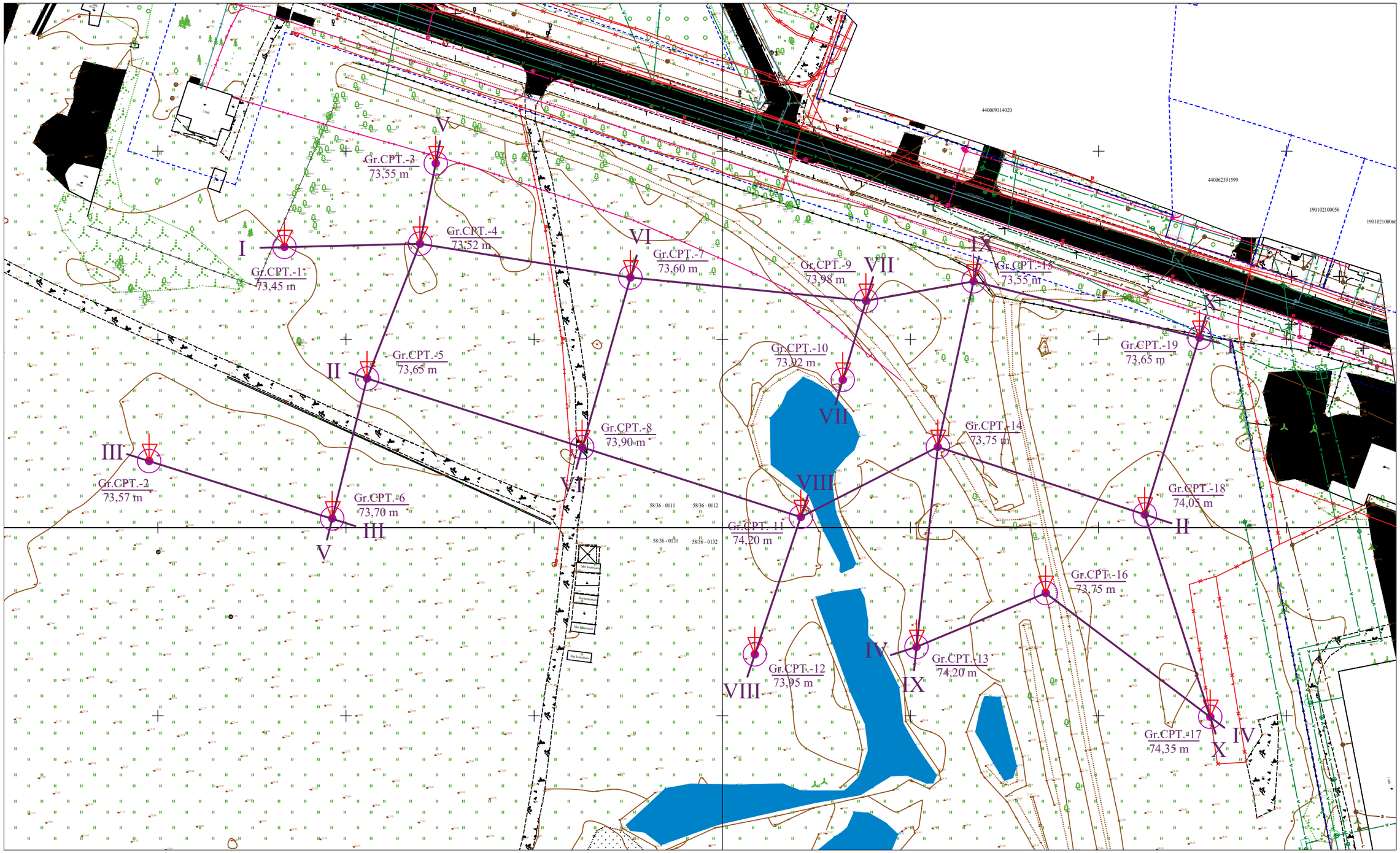

Sutartiniai ženklai

- Gręžinio ir CPT bandymo vieta
- Gr.CPT.-1 — Gręžinio ir CPT bandymo numeris
- 73,45 m — Altitudė m.
- I-I — Inžinerinio geologinio pjūvio Nr.

Rapasta

LGT leidimo Nr. 30
Gedimino g. 47-217
LT - 44242, Kaunas
info@rapasta.lt

OBJEKTAS : Universalaus sporto paskirties inžinierinių statinių (11.) komplekso Veiverių pl. 132, Kauno m., statybos projektas

PAREIGOS	PAVARDĖ	PARAŠAS
Lauko darbų geologas	A. Motūza	
Brėžinį paruošė inž. geologas	E. Belozaras	
Mastelis 1:1000	Data	2024 07

BRĖŽINYS : Topografinis planas su gręžinių, statinio zondavimo (CPT) vietomis ir inžinerinių geologinių pjūvių linijomis

Išvada dėl inžinerinių skaičiavimų rezultatų atitikties
Visi konstrukcijų skaičiavimai atlikti vadovaujantis:

- **Lietuvos statybos techniniais reglamentais (STR)**,
- **Eurokodų standartų reikalavimais (LST EN 1990, 1991, 1992, 1997 ir kt.)**,
- **Statinio projektavimo užduotyje** pateiktais parametrais: apkrovomis, statinio paskirtimi, konstrukcijų medžiagomis, eksploataciniais reikalavimais.

Skaičiavimo rezultatai parodė, kad visų konstrukcinių elementų **laikančioji galia, deformacijos, pastovumas ir ribiniai būviai** atitinka keliamus reikalavimus.
Todėl konstrukciniai sprendiniai laikytini **pagrįstais, techniškai tinkamais ir normatyviškai pagrįstais**.